SEQUENCE OF OPERATION										
	BUILDING POWER FAILURE	AREA SMOKE DETECTOR	AREA HEAT DETECTOR	ATTIC HEAT DETECTOR	MANUAL PULL STATION	KITCHEN FIRE SUPRESSION	OPEN SHORT OR GROUND	SPRINKLER WATER FLOW SWITCH	SPRINKLER DAMPER SWITCH	DUCT MTD. SMOKE DETECTOR (AIR CONTROL)
ANNUNCIATE AT FIRE CONTROL PANEL (ALARM, SUPERVISION & TROUBLE)	YES	YES	YES	YES	YES	YES	YES	YES	YES	YES
SOUND CONTROL PANEL TROUBLE BUZZER	YES	ON WIRING FAULT	ON WIRING FAULT	ON WIRING FAULT	ON WIRING FAULT	ON WIRING FAULT	YES	YES	YES	ON WIRING FAULT
ACTIVATE AUDIBLE ALARM SIGNALS (UNTIL SILENCE)	NO	YES	YES	YES	YES	YES	NO	YES	NO	YES
ACTIVATE VISUAL ALARM SIGNALS (UNTIL RESET)	NO	YES	YES	YES	YES	YES	NO	YES	NO	YES
MECHANICAL UNITS SHUTDOWN	NO	YES	NO	NO	NO	NO	NO	YES	YES	YES
REPORT TO CENTRAL STATION	YES	YES	YES	YES	YES	YES	NO	YES	NO	YES
SHUT DOWN PA SYSTEM	NO	YES	YES	YES	YES	YES	NO	YES	NO	YES
SHUT DOWN CLASS CHANGING BELLS	NO	YES	YES	YES	YES	YES	NO	YES	NO	YES
ACTIVATE SPRINKLER RISER BELL	NO	YES	YES	YES	YES	YES	NO	YES	NO	NO

SEQUENCE OF OPERATIONS — NTS — 1

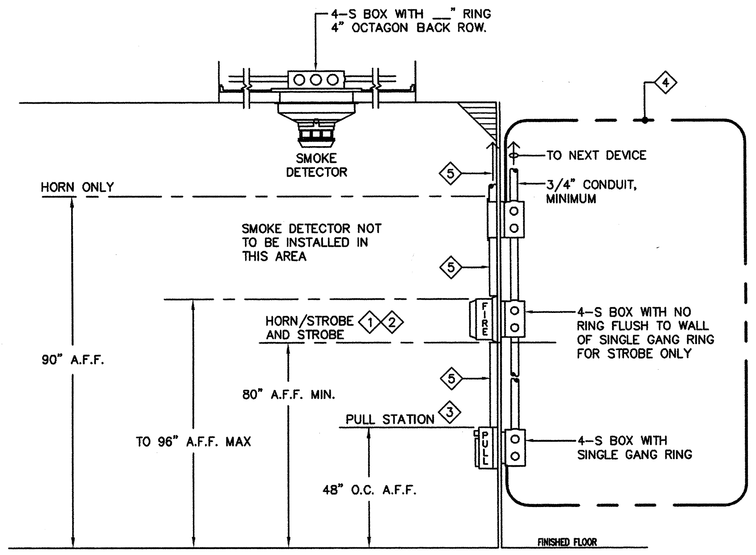

NOTES:

1. THE ENTIRE LENS OF STROBE LIGHTS MUST BE BETWEEN 80" AND 96" ABOVE FLOOR FINISH (AFF).
2. OF CEILING HEIGHTS EXCEED 30 FEET, STROBE LIGHTS MUST BE SUSPENDED AT OR BELOW 30 FEET. (2002 NFPA 7.5.4.1.6).
3. MANUAL FIRE ALARM BOXES SHALL BE INSTALLED IN ACCORDANCE WITH SECTIONS 907.3.1 THROUGH 907.3.5.

   MANUAL FIRE ALARM BOXES SHALL BE LOCATED NOT MORE THAN 5 FEET (1524mm) FROM THE ENTRANCE TO EACH EXIT. ADDITIONAL MANUAL FIRE ALARM BOXES SHALL BE LOCATED SO THAT TRAVEL DISTANCE TO THE NEAREST BOX DOES NOT EXCEED 200 FEET (60 960mm).

   THE HEIGHT OF THE MANUAL FIRE ALARM BOXES SHALL BE 48 INCHES (1219mm), MEASURED VERTICALLY, FROM THE FLOOR LEVEL TO THE CENTER OF THE BOX. MANUAL FIRE ALARM BOXES SHALL ALSO COMPLY WITH SECTION 11178.6 ITEM 4.
4. APPLICABLE FOR NEW WALL INSTALLATION.
5. APPLICABLE FOR EXISTING WALL INSTALLATION. PROVIDE/INSTALL METAL SURFACE RACEWAY.

MOUNTING HEIGHT DETAIL — NTS — 2

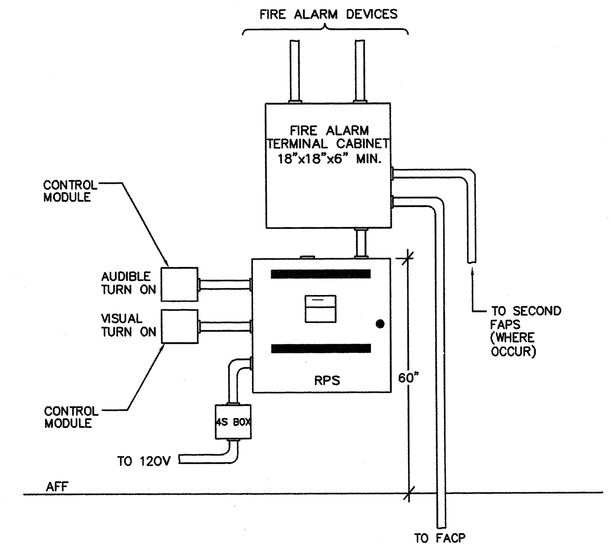

TYPICAL POWER SUPPLY LAYOUT — NTS — 3

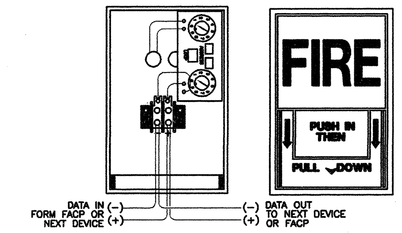

ADDRESSABLE MANUAL PULL STATION

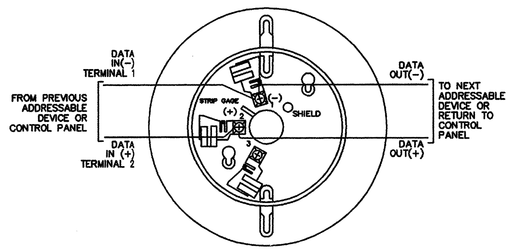

ADDRESSABLE SMOKE DETECTOR WIRING

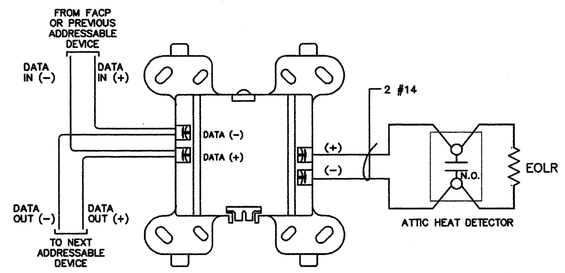

MONITOR MODULE WIRING

TYPICAL DEVICE WIRING — NTS — 4

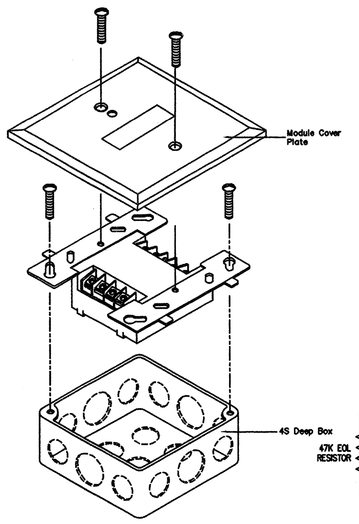

FM-1 SPECIFICATIONS:
Normal Operating voltage: 15 to 32 VDC
Maximum Current: 5.1 mA (LED on)
Average Operating Current: 400 uA (LED flashing)
EOL Resistance: 47K ohms
Temperature Range: 32°F to 120°F (0°C to 49°C)
Humidity Range: 10% to 93% non-condensing

Backbox Requirements: 4S DEEP BOX

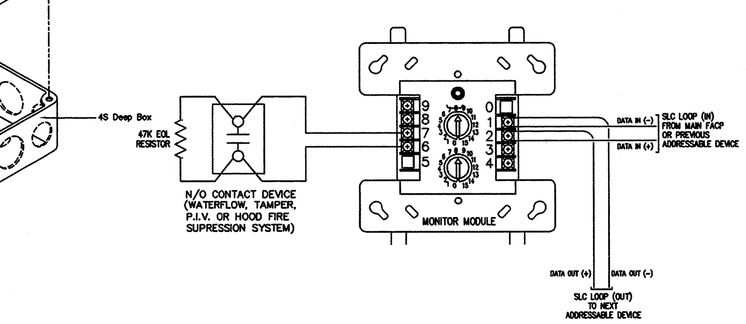

FLOW AND TAMPER SWITCH WIRING DETAIL — NTS — 5

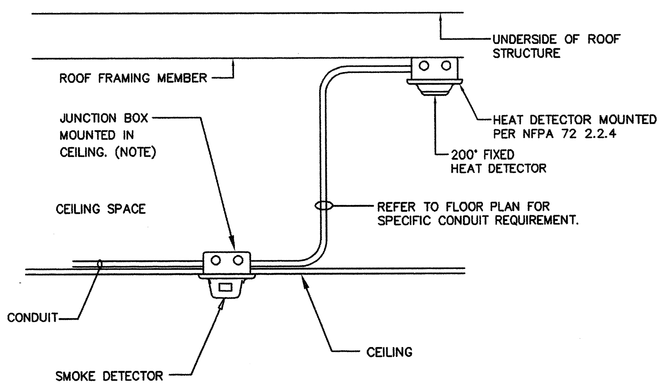

ATTIC HEAT DETECTOR MOUNTING DETAIL — NTS — 6

FM-1 SPECIFICATIONS:
Normal Operating voltage: 15 to 32 VDC
Maximum Current: 5.1 mA (LED on)
Average Operating Current: 400 uA (LED flashing)
EOL Resistance: 47K ohms
Temperature Range: 32°F to 120°F (0°C to 49°C)
Humidity Range: 10% to 93% non-condensing

Backbox Requirements: 4S DEEP BOX

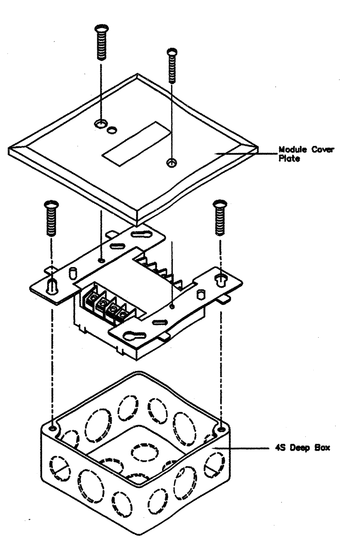

NOTE:

WATER GONG SHALL ONLY BE RESET AT FIRE ALARM CONTROL PANEL MANUALLY BY FIRE DEPARTMENT. WATER GONG SHALL NOT RESET UPON LACK OF SPRINKLER FLOW.

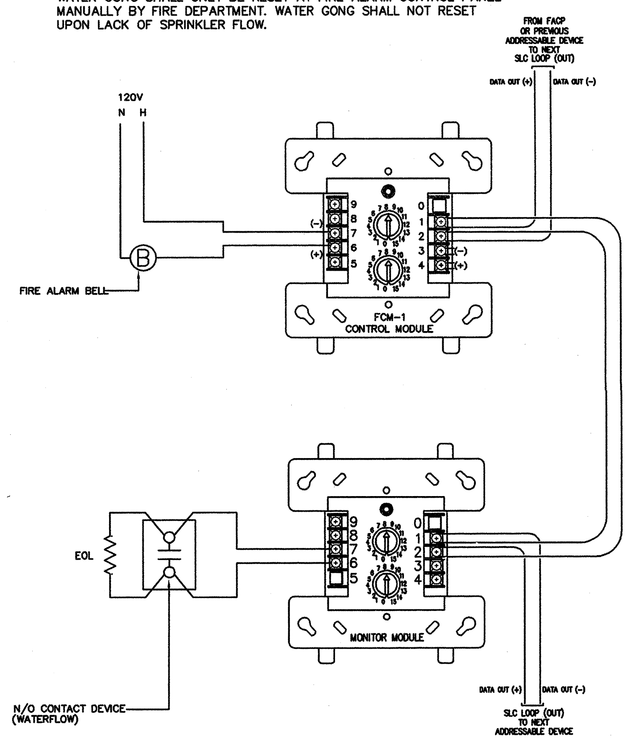

FCM-1 SPECIFICATIONS:
Nominal Operating voltage: 15 to 32 VDC
Maximum Current: 5.1 mA (LED on)
Average Operating Current: 400 µA (LED flashing)
EOL Resistance: 47K ohms
Temperature Range: 32°F to 120°F (0°C to 49°C)

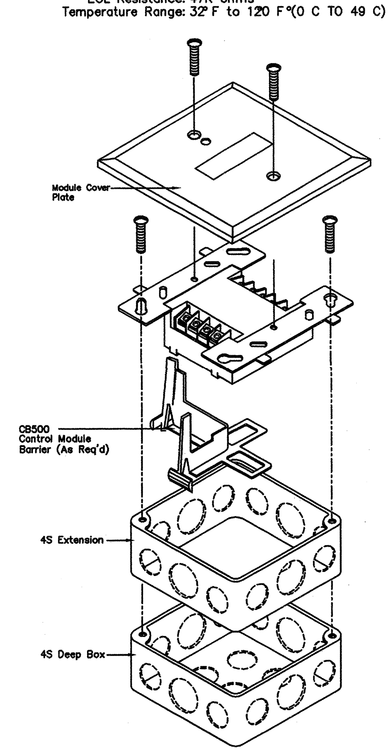

SPRINKLER BELL CONTROL MODULE DETAIL — NTS — 7

N:\20.CAD\TTG_Projects\2008\2008-125-00\Mpe\E5-7.dwg 11/09/2009

SANTA ANA UNIFIED SCHOOL DISTRICT

gkkworks
2355 Main Street Suite 220
Irvine | CA 92614
949 250 1500
949 955 2708 fax

Architect Seal

LICENSED ARCHITECT GUILLERMO AGUILAR NO. C13165 REN.: MAY. 2011 STATE OF CALIFORNIA

Consultant and Seal

TMAD TAYLOR & GAINES
- STRUCTURAL
- MECHANICAL
- ELECTRICAL
- CIVIL

800 North Ferrari Lane, Suite 100
Ontario, California 91764
Phone: 909.477.6915 Fax: 909.477.6916
Project No. 2008.125.00

REGISTERED PROFESSIONAL ENGINEER HECTOR C. TORDILLO, JR. Lic. E16934 Exp. 6-30-2011 ELECTRICAL STATE OF CALIFORNIA

Agency Approval

IDENTIFICATION STAMP
DIV. OF THE STATE ARCHITECT
APPL. 04-110031
AC CLS DU SS RH
DATE NOV 24 2009

No.	Date	Revision/Issue
	12/08/08	DSA SUBMITTAL
	02/11/09	DSA SUBMITTAL
	5/11/09	DSA BACKCHECK
	12/15/2011	BID SET

Project Name

MUIR FUNDAMENTAL SCHOOL MODERNIZATION
1951 MABURY ST.
SANTA ANA, CA 92707

Checked By	Drawn By
RA	JHC

Sheet Title

FIRE ALARM DETAILS AND SEQUENCE OF OPERATIONS

Sheet Number

E5.7

Project Number	Scale
10021-010	NONE

© 2009 gkkworks, All Rights Reserved
NO PART OF THE CONTENTS OF THIS DOCUMENT MAY BE REPRODUCED OR TRANSMITTED IN ANY FORM OR BY ANY MEANS WITHOUT THE WRITTEN PERMISSION OF GKKWORKS.