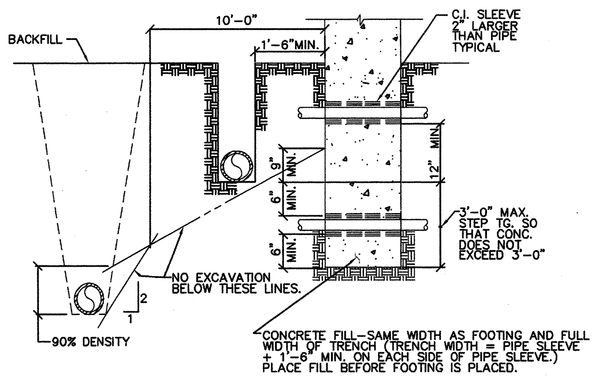

NOTE: FOR PIPES MORE THAN 3'-0" BELOW BOTTOM OF FOOTING, TRENCH MAY BE BACKFILLED WITH CONTROLLED, COMPACTED FILL PER SPECIFICATIONS.

PIPE THRU FOOTING DETAIL — NTS — 10

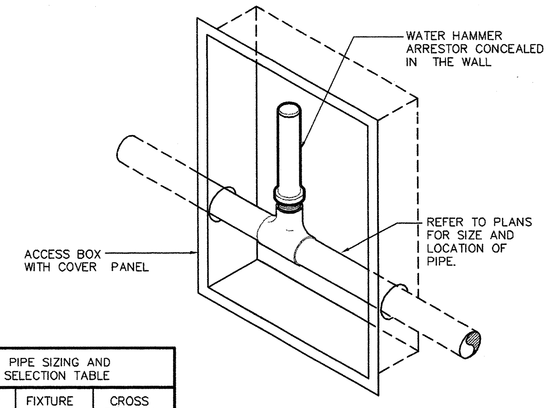

PIPE SIZING AND SELECTION TABLE		
PPP SIZE	FIXTURE UNITS	CROSS REF. PDI
1/2"	1-11	A
3/4"	12-32	B
1"	33-60	C
1 1/4"	61-113	D
1 1/2"	114-154	E
2"	155-330	F

NOTE:

FINAL SIZING AND MODEL SELECTION SHALL BE PER MANUFACTURERS RECOMMENDATIONS.

WATER HAMMER ARESSTOR SHOULD BE INSTALLED IN AN UPRIGHT POSITION

WATER HAMMER ARESSTOR SHOULD BE INSTALLED AT EACH QUICK CLOSING FAUCET OR FLUSH VALVE UNLESS USED IN A BANK OF FIXTURES.

WHEN INSTALLING ON A BANK OF FIXTURES THE WATER HAMMER ARESSTOR SHALL BE INSTALLED BEFORE THE LAST FIXTURE ON THE BANK.

WATER HAMMER ARRESTOR — NTS — 7

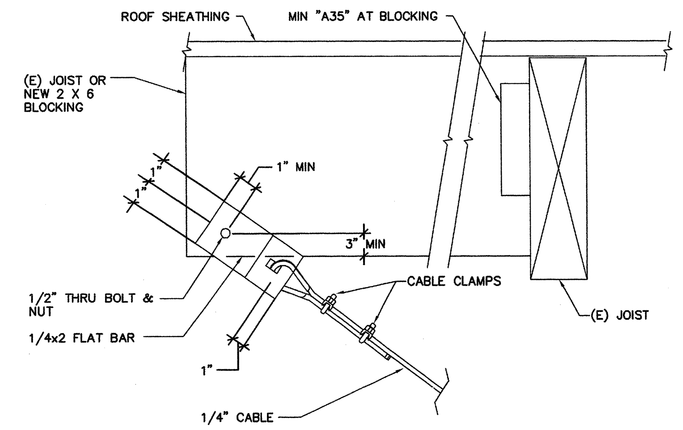

NOTE:
1. BRACING CABLE SHALL BE PARALLEL TO EXISTING JOIST OR NEW 2 x 6 BLOCKING.
2. BLOCKING MAY BE SKEWED WITH RESPECT TO EXISTING JOIST.

PIPING SEISMIC CABLE ANCHOR — NTS — 4

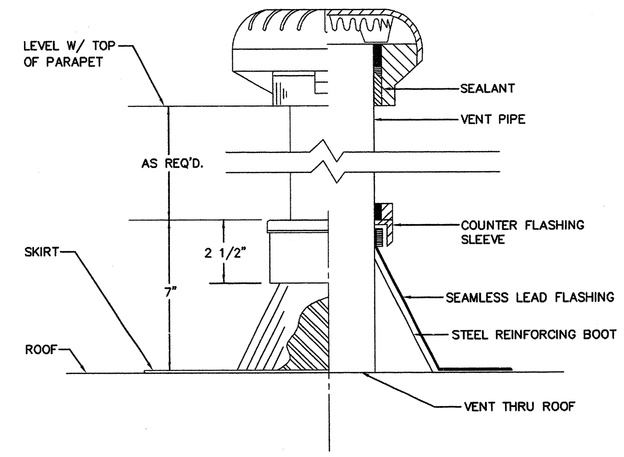

VENT THRU ROOF — NTS — 1

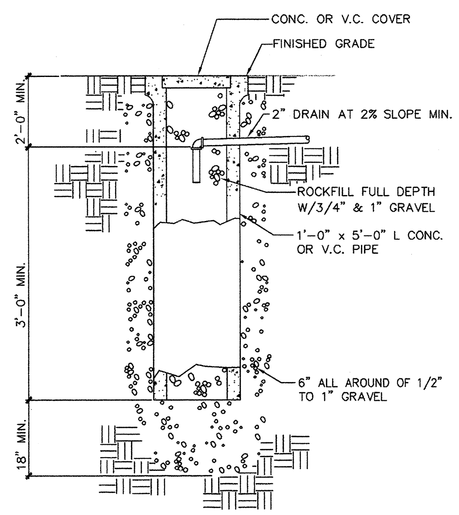

DRYWELL DETAIL — NTS — 11

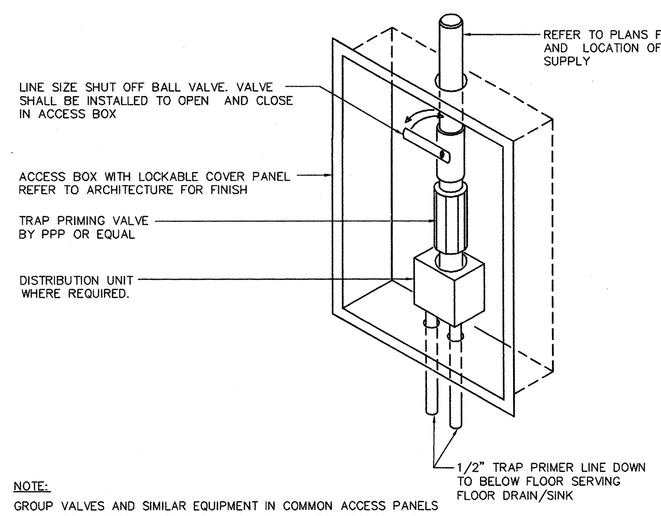

NOTE:

GROUP VALVES AND SIMILAR EQUIPMENT IN COMMON ACCESS PANELS WHEN APPLICABLE. ALL ITEMS SHALL BE FULLY OPERATIONAL AND SERVICEABLE.

FLOOR DRAIN TRAP PRIMER (MFG. BY PRECISION PLUMBING PRODUCTS) DISTRIBUTION CHART				
NO. OF DRAINS	PRIMER MODEL	MAX. WATER DEL. ON 15 SEC. PRESS. DROP.	USE STAND PIPE STYLE	DISTRIBUTION UNIT IS
1	P-2	2 OZ.	STRAIGHT	NOT REQUIRED
2	P-2	2 OZ.	STRAIGHT	NOT REQUIRED

AUTOMATIC TRAP PRIMER — NTS — 8

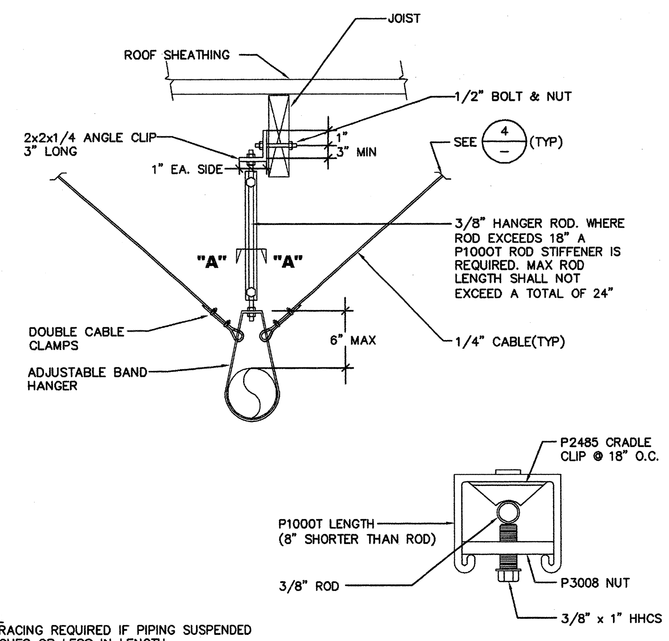

NOTE:
1. NO BRACING REQUIRED IF PIPING SUSPENDED 12 INCHES OR LESS IN LENGTH
2. SEISMIC BRACING REQUIRED EVERY 40'
3. MAX PIPE WEIGHT 5 lbs. PER FOOT

SINGLE PIPE HANGER — NTS — 5

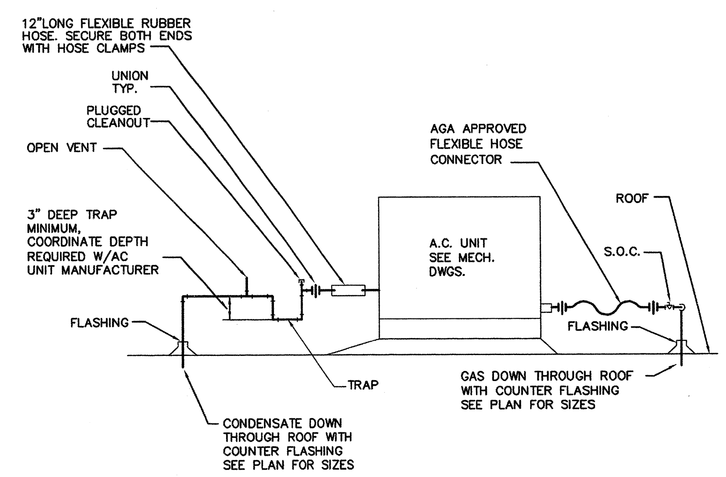

GAS & CONDENSATE DRAIN CONN. TO A.C. UNIT — NTS — 2

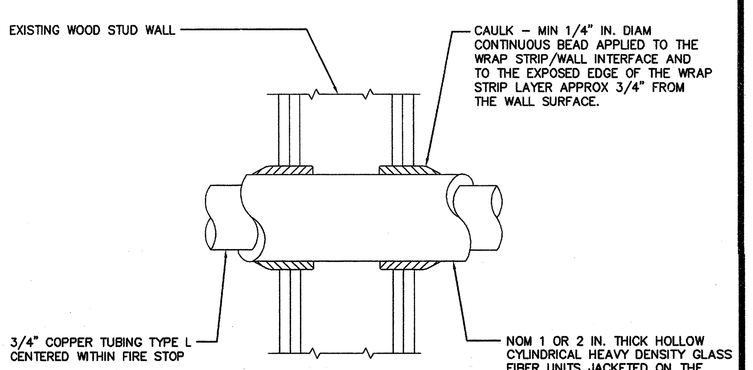

1) DETAIL BASED FROM WL 5001 IN THE U.L. FIRE RESISTANCE DIRECTORY, REFER TO THE LATEST ADDITION FOR MORE INFORMATION.

WALL PENETRATION — NTS — 12

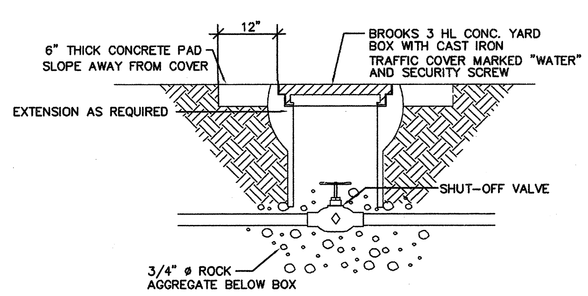

SHUT-OFF VALVE IN BOX DETAIL — NTS — 9

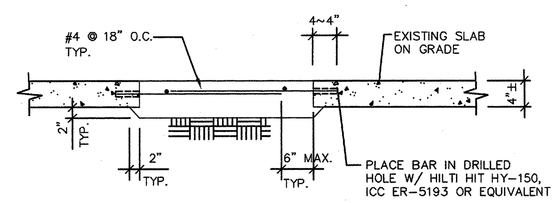

CONCRETE SLAB PATCH AND REPAIR DETAIL — NTS — 6

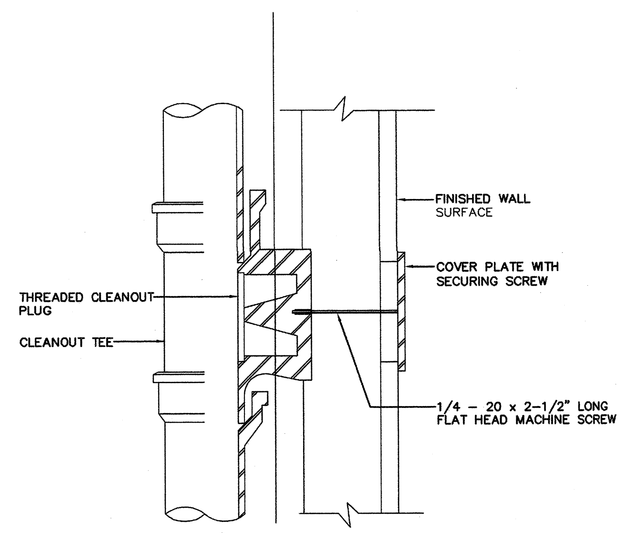

WALL CLEANOUT — NTS — 3

SANTA ANA UNIFIED SCHOOL DISTRICT

gkkworks
2355 Main Street Suite 220
Irvine | CA 92614
949 250 1500
949 955 2708 fax

Architect Seal
LICENSED ARCHITECT GUILLERMO AGUILAR NO. C13165 REN.: MAY. 2011 STATE OF CALIFORNIA

Consultant and Seal
TMAD TAYLOR & GAINES
• STRUCTURAL • MECHANICAL • ELECTRICAL • CIVIL
800 North Ferrari Lane, Suite 100
Ontario, California 91764
Phone: 909.477.6915 Fax: 909.477.6916
Project No. 2008.125.00

REGISTERED PROFESSIONAL ENGINEER CHRIS E. RADTKE No. M24519 Exp. 9/30/10 MECHANICAL STATE OF CALIFORNIA

Agency Approval

IDENTIFICATION STAMP
DIV. OF THE STATE ARCHITECT
APPL. 04-110031
AC ___ FLS ___ SS RH
DATE NOV 2 4 2009

No.	Date	Revision/Issue
	12/08/08	DSA SUBMITTAL
	02/11/09	DSA SUBMITTAL
	5/11/09	DSA BACKCHECK
	12/15/2011	BID SET

Project Name
MUIR FUNDAMENTAL SCHOOL MODERNIZATION
1951 MABURY ST.
SANTA ANA, CA 92707

Checked By: W.S.H.
Drawn By: A.D.

Sheet Title
DETAILS

Sheet Number
P5.1

Project Number: 10021-010
Scale: AS SHOWN

©2009 gkkworks, All Rights Reserved
NO PART OF THE CONTENTS OF THIS DOCUMENT MAY BE REPRODUCED OR TRANSMITTED IN ANY FORM OR BY ANY MEANS WITHOUT THE WRITTEN PERMISSION OF GKKWORKS.

N:\20.CAD\TTG_Projects\2008\2008-125-00\Mpe\P5-1.dwg 11/13/2009