1. MOUNT ALL VISUAL SIGNALING APPLIANCES AT LENS BETWEEN +80" AND +96"AFF.
2. ALL EQUIPMENT SHALL BE U.L. AND C.S.F.M. LISTED.
3. ALL WIRING SHALL BE IN ACCORDANCE WITH THE C.E.C. AND AUTHORITIES HAVING JURISDICTION.
4. ALL JUNCTION BOXES SHALL BE SIZED IN ACCORDANCE WITH THE C.E.C.
5. ALL 120VAC POWER REQUIREMENTS FOR THE FIRE ALARM SYSTEM SHALL BE FURNISHED BY THE ELECTRICAL CONTRACTOR AND SHALL MEET ALL REQUIREMENTS OF THE AUTHORITIES HAVING JURISDICTION.
6. ALL FIRE ALARM DEVICE BACKBOXES, FIRE ALARM TERMINAL CABINETS, GUTTERS, JUNCTION BOXES, AND ASSOCIATED CONDUITS SHALL BE FURNISHED AND INSTALLED BY ELECTRICAL CONTRACTOR UNLESS OTHERWISE NOTED. REFER TO FIRE ALARM SYMBOL LIST AND/OR MOUNTING DETAILS FOR ADDITIONAL INFORMATION. SYSTEM SUPPLIER PROVIDED BACKBOXES SHALL BE INSTALLED BY ELECTRICAL CONTRACTOR UNLESS OTHERWISE NOTED.
7. SMOKE DETECTOR TESTING SHALL BE ACCOMPLISHED WITH TEST MAGNETS AS PER THE MANUFACTURER'S INSTRUCTIONS.
8. ALL WIRING, ANNUNCIATING DEVICES AND ANNUNCIATOR PANEL SHALL BE SUPERVISED TO THE PRINCIPLE POINT OF ANNUNCIATION. THE FIRE ALARM CONTROL PANEL TO SUPERVISE THE ANNUNCIATOR PANEL, ALL INITIATING AND INDICATING DEVICE CIRCUITS.
9. ALL WIRING SHALL BE CUT FOR IN AND OUT. WIRING SHALL NOT BE LOOPED THROUGH DEVICES.
10. POINT AND COMMON ANNUNCIATION AND T-TAPPING ARE PROHIBITED.
11. FIRE ALARM SYSTEM INSTALLATION COMPANY SHALL BE UL LISTED.
12. ALL CONDUITS ARE 3/4" UNLESS OTHERWISE NOTED.
13. SYSTEM SHALL BE FURNISHED AND INSTALLED BY A FACTORY AUTHORIZED AND CERTIFIED AGENCY.
14. ALL INITIATING DEVICES SHALL BE ADDRESSBLE. PROVIDE ADDRESSABLE BASE. MONITOR MODULE, CONTROL MODULE AS REQUIRED.
15. PROVIDE CALIFORNIA TEMPORAL-THREE TONE DISTINCTIVE FIRE ALARM SOUND. (CFC SEC. 1007.3.3.3.2 AND NFPA 72, 2002 EDITION)
16. AUDIBLE FIRE ALARM SOUND LEVEL SHALL BE AT LEAST 15 dBA ABOVE THE AVERAGE AMBIENT SOUND LEVEL IN ALL OCCUPIABLE AREAS. (NFPA 72, 2002 EDITION) (i.e. CLASSROOM AVERAGE AMBIENT ROOM NOISE IS 45dBA PLUS 15dBA EQUAL = 60dBA MINIMUM ALARM TONE REQUIRED)
17. STROBES SHALL FLASH AT A RATE NOT EXCEEDING TWO FLASHES PER SECOND NOR BE LESS THAN ONE FLASH EVERY SECOND. (NFPA 72, 2002 EDITION)
18. FINAL FIRE ALARM TEST SHALL BE MADE WITH THE DSA INSPECTOR OF RECORD (IOR). LOCAL FIRE AUTHORITY SHALL BE NOTIFIED OF DATE AND TIME OF FINAL ALARM TESTING AND SHALL ASSIST/WITNESS SUCH TESTING WHEN ABLE.
19. FIRE ALARM CONTRACTOR SHALL PROVIDE A "RECORD OF COMPLETION" TO THE INSPECTOR OF RECORD (IOR)/DSA AFTER COMPLETION OF OPERATION ACCEPTANCE TEST. (NFPA 72, 2002 EDITION)
20. UNLESS SPECIFICALLY SHOWN ON THESE PLANS NO STRUCTURAL MEMBER SHALL BE CUT, DRILLED, NOR NOTCHED WITHOUT PRIOR WRITTEN AUTHORIZATION FROM THE STRUCTURAL ENGINEER AND DISTRICT STRUCTURAL ENGINEER FROM THE DIVISION OF THE STATE ARCHITECT.
21. WHERE ROOMS THAT HAVE THE COMBINATION HORN/STROBE LIGHTS, DEVICES SHALL BE SYNCHRONIZED.

FIRE ALARM GENERAL NOTES — NTS — 1

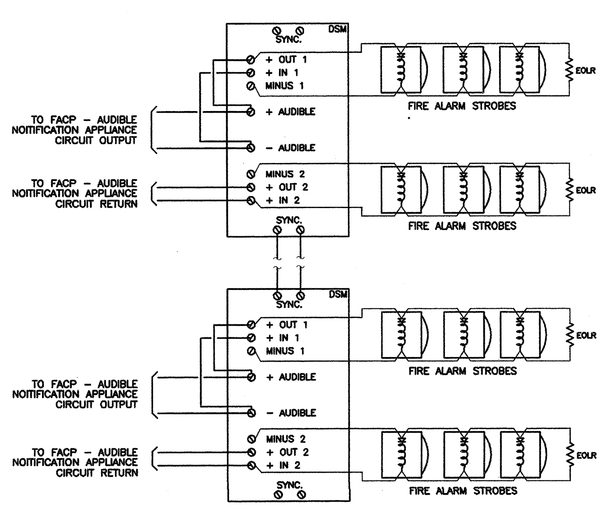

DUAL SYNC MODULE - STROBES

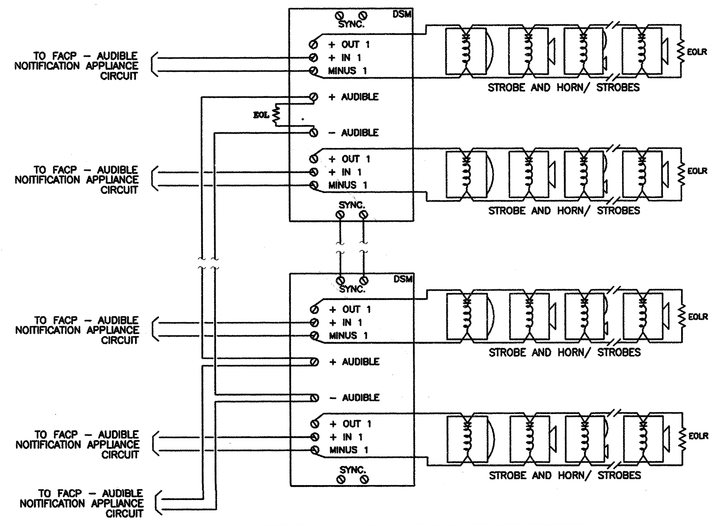

SYNC MODULE - SILENCABLE HORNS/NON-SILENCEABLE STROBES

SIGNALING DEVICE WIRING DETAIL — NTS — 2

Provide District Standard

FIRE ALARM SYSTEM SYMBOL LIST

	PART NO.	DESCRIPTION	MANUFACTURER	CSFM	MOUNTING	BACKBOX
FACP	NFS-640	FIRE ALARM CONTROL PANEL	NOTIFIER	7165-0028:214	WALL-SURFACE	–
ANN	LCD-NCA	FIRE ALARM ANNUNCIATOR	NOTIFIER	7165-0028:214	WALL-SURFACE	–
UDACT	UDACT	UNIVERSAL DIGITAL ALARM COMMUNICATION TRANSMITOR	NOTIFIER	7300-0028:214	LOCATE WITHIN NFS-640 CONTROL PANEL	–
RPS	FCPS-24S8	REMOTE POWER SUPPLY	NOTIFIER	7315-0028:225	WALL-SURFACE	–
	BAT-1270	BATTERY, (2) 7AH-12VDC				N/A
F	NBG-12LX	MANUAL PULL STATION	NOTIFIER	7150-0028:199	WALL MTD. W/LENS @ +48"MIN,96"MAX. AFF	4"S x 2-1/8"D BOX
HD	5602	ATTIC HEAT DETECTOR WITH MONITOR MODULE "FMM-1"	SYSTEM SENSOR	7270-1653:167	–	–
SD	FSP-851	PHOTO ELECTRIC SENSOR	NOTIFIER	7272-0028:206	ON BASE	4"S BOX
	B710LP	STANDARD LOW PROFILE BASE	NOTIFIER	7300-0028:173	CEILING	
DD	FSD-751 RPL	AIR DUCT TYPE SMOKE DETECTOR	NOTIFIER	7300-0025:202	ON BASE	4"S BOX
	RA400Z	REMOTE LED	NOTIFIER		CEILING	
M	FMM-1	CONTROL MODULE	NOTIFIER	7300-0028:202	WALL	4"S x 2-1/8"D BOX
B	SSV-120-10	ALARM BELL	SYSTEM SENSOR	7135-1653:100	–	–
F 15cd	GES24-15WR	STROBE (15cd)	GENTEX	7125-0569:123	SEE #2/E5.7	4"S x 1-1/2"D BOX
F 30cd	GES24-30WR	STROBE (30cd)	GENTEX	7125-0569:123	SEE #2/E5.7	4"S x 1-1/2"D BOX
F 75cd	GES24-75WR	STROBE (75cd)	GENTEX	7125-0569:123	SEE #2/E5.7	4"S x 1-1/2"D BOX
F 110cd	GES24-110WR	STROBE (110cd)	GENTEX	7125-0569:123	SEE #2/E5.7	4"S x 1-1/2"D BOX
15cd	GEC24-15WR	HORN/STROBE (15cd)	GENTEX	7125-0569:122	SEE #2/E5.7	4"S x 1-1/2"D BOX
30cd	GEC24-30WR	HORN/STROBE (30cd)	GENTEX	7125-0569:122	SEE #2/E5.7	4"S x 1-1/2"D BOX
75cd	GEC24-75WR	HORN/STROBE (75cd)	GENTEX	7125-0569:122	SEE #2/E5.7	4"S x 1-1/2"D BOX
110cd	GEC24-110WR	HORN/STROBE (110cd)	GENTEX	7125-0569:122	SEE #2/E5.7	4"S x 1-1/2"D BOX
H WP	AH-24WP	EXTERIOR WEATHER PROOF HORN	GENTEX	7125-0785:131	WALL-SURFACE @ +90" AFF	–
TS	OSY2	TAMPER SWITCH WITH MONITOR MODULE "FMM-1"	SYSTEM SENSOR	7770-1653:118	–	–
FS	WFD	FLOW SWITCH WITH MONITOR MODULE "FMM-1"	SYSTEM SENSOR	7770-1653:114	–	–

TTG PROJECT #2008.125.00

THE MANUFACTURER INDICATED ON THE DRAWINGS AND IN THE SPECIFICATIONS IS THE DSA APPROVED MANUFACTURER OF THIS PROJECT. ANY SUBSTITUTION OF MANUFACTURER (NOTIFIER, FCI, ETC.) BY THE CONTRACTOR MUST BE ACCOMPANIED WITH REVISED FLOOR PLANS, EQUIPMENT CUT SHEETS, CSFM LISTING SHEETS CALCULATIONS, AND DETAILS. SUBMIT TO E.E. & I.O.R. FOR EQUAL. (NO MAJOR CHANGES FROM DEPICTED DESIGN REQUIRES NO FURTHER DSA REVIEW).

COMPLETE FIRE SYSTEM DESIGN SUBMITTAL PER CBC-2007 907.2.3

THE FIRE ALARM DESIGN IS CONFIGURED TO FULLY AUTOMATIC SYSTEM

FIRE ALARM SYMBOL LIST — NTS — 3

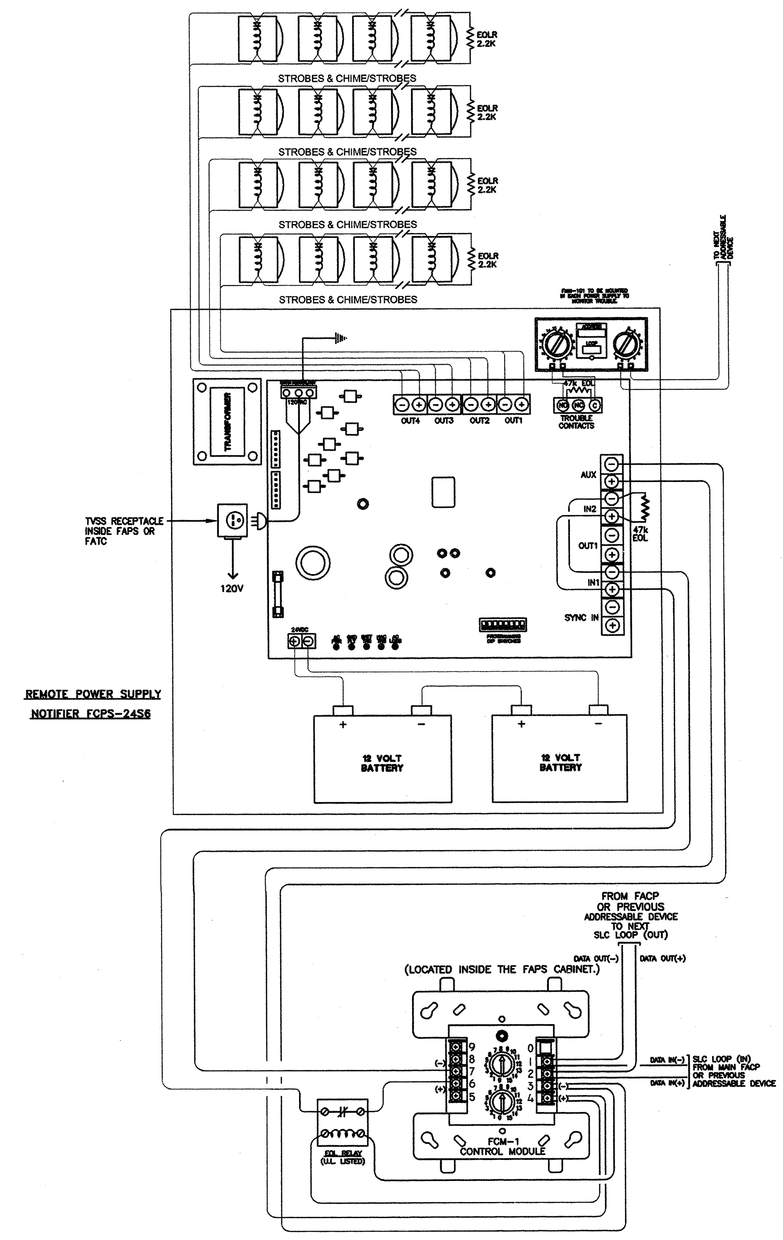

FIRE ALARM REMOTE POWER SUPPLY WIRING DIAGRAM — NTS — 5

gkkworks
2355 Main Street Suite 220
Irvine | CA 92614
949 250 1500
949 955 2708 fax

Architect Seal

LICENSED ARCHITECT GUILLERMO AGUILAR NO. C13185 REN.: MAY. 2011 STATE OF CALIFORNIA

Consultant and Seal

TMAD TAYLOR & GAINES
- STRUCTURAL
- MECHANICAL
- ELECTRICAL
- CIVIL

800 North Ferrari Lane, Suite 100
Ontario, California 91764
Phone: 909.477.6915 Fax: 909.477.6916
Project No. 2008.125.00

REGISTERED PROFESSIONAL ENGINEER HECTOR C. TONUCCI Lic. E16934 Exp. 6-30-2011 ELECTRICAL STATE OF CALIFORNIA

Agency Approval

IDENTIFICATION STAMP
DIV. OF THE STATE ARCHITECT
APPL. 04-110031
AC ___ FLS DN SS KH
DATE NOV 2 4 2009

No.	Date	Revision/Issue
	12/08/08	DSA SUBMITTAL
	02/11/09	DSA SUBMITTAL
	5/11/09	DSA BACKCHECK
	12/15/2011	BID SET

Project Name

MUIR FUNDAMENTAL SCHOOL MODERNIZATION
1951 MABURY ST.
SANTA ANA, CA 92707

Checked By	Drawn By
RA	JHC

Sheet Title

FIRE ALARM NOTES, LEGEND AND WIRING DETAIL

Sheet Number

E5.5

Project Number	Scale
10021-010	NONE

© 2009 gkkworks, All Rights Reserved
NO PART OF THE CONTENTS OF THIS DOCUMENT MAY BE REPRODUCED OR TRANSMITTED IN ANY FORM OR BY ANY MEANS WITHOUT THE WRITTEN PERMISSION OF GKKWORKS.

N:\20.CAD\TTG_Projects\2008\2008-125-00\Mps\E5-5.dwg 11/09/2009