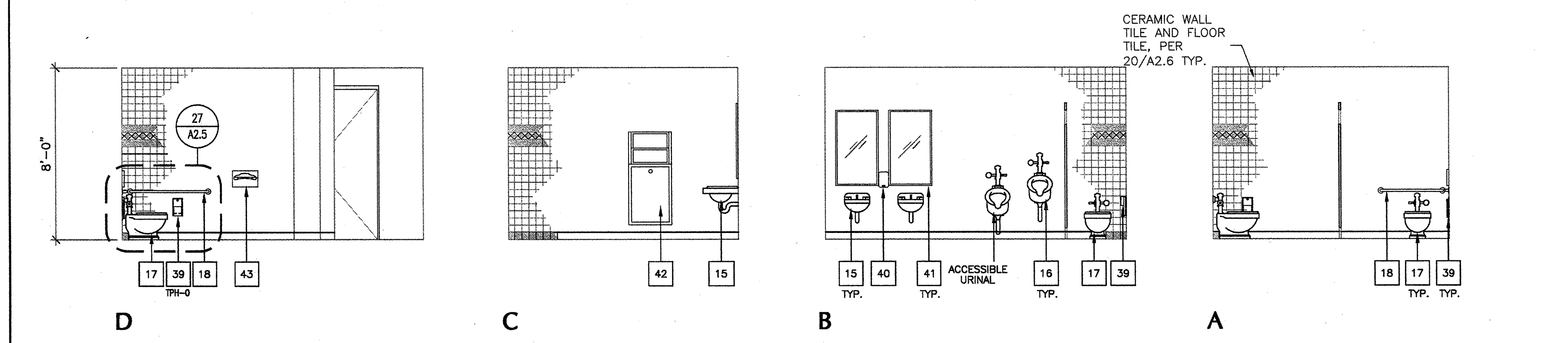

30 BOYS RESTROOM 134 INTERIOR ELEVATIONS (SEE 16,17 AND 21 , SHEET A2.5, FOR MOUNTING INFO)

SCALE: 1/4" = 1'-0"

NOTE: REFER TO 21/A2.5 FOR ACCESSIBLE DIMENSIONS

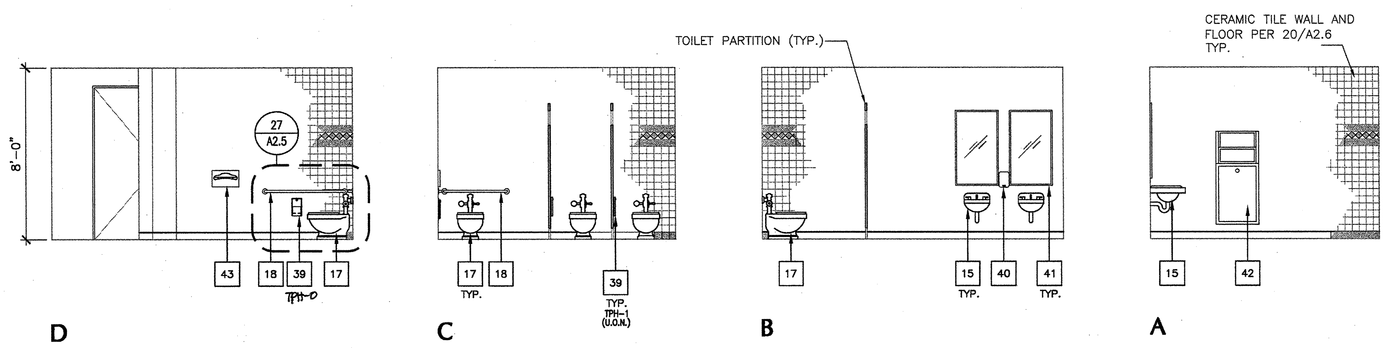

29 GIRLS RESTROOM 155 INTERIOR ELEVATIONS (SEE 16,17 AND 21 , SHEET A2.5 FOR MOUNTING INFO)

SCALE: 1/4" = 1'-0"

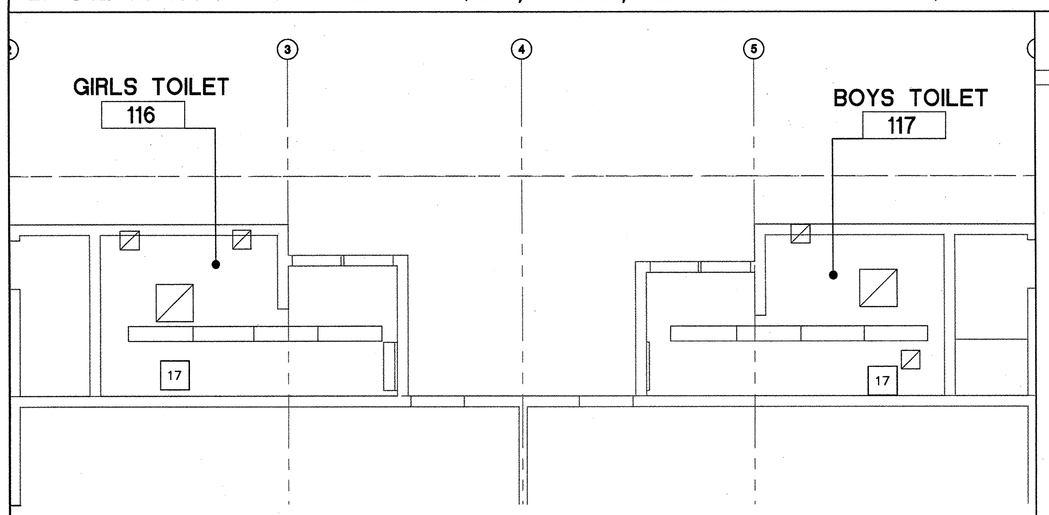

28 BUILDING 6 BOYS & GIRLS RESTROOM REFLECTED CEILING PLAN

SCALE: 3/16"=1'-0"

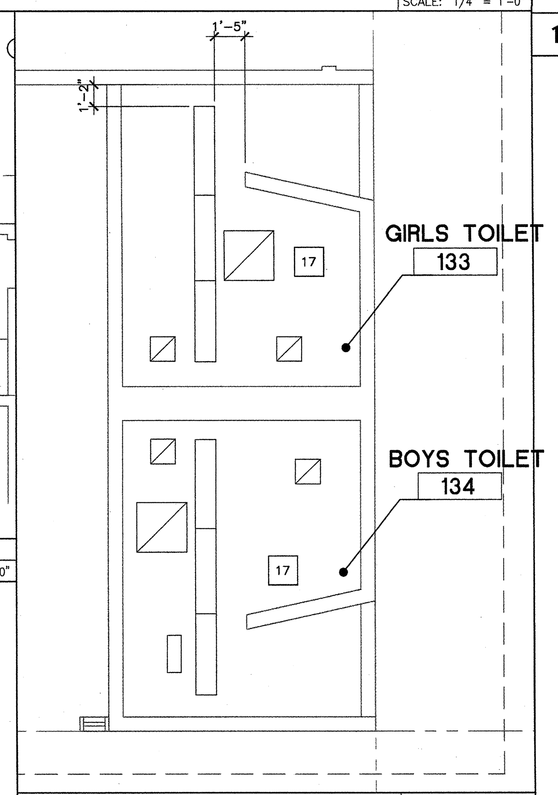

21 BUILDING 7 R.C.P.

1/4"=1'-0"

SCALE: NTS

CEILING RENOVATION LEGEND & KEYNOTES

- (E) LIGHT FIXTURE-RELAMP/REPLACE PER ELEC DWG.
- (E) MECH. GRILL, CLEAN AND REPLACE
- 17 REPAINT (E) HARD LID CEILING (GLOSS FINISH)

GENERAL NOTES

1. REFER TO SHEET G0.1 & G0.2 FOR GENERAL NOTES, ACCESSIBILITY NOTES, FIRE AND LIFE SAFETY NOTES AND ABBREVIATION DESCRIPTIONS.
2. REFER TO SHEET G0.2 FOR GENERAL NOTES THAT ARE HEREBY INCORPORATED INTO THE WORK.
3. REFER TO THE LEGENDS ON EACH SHEET FOR DEFINITIONS OF THE GRAPHIC SYMBOLS USED ON THE DRAWINGS TO DESCRIBE THE WORK
4. THE KEY NOTES ARE DEPICTED BY BOXES (#) THAT APPEAR ON THE DRAWINGS AND IN THE LEGEND, REFER TO THE CORRESPONDING KEY NOTES LISTED ON THE SHEET. THESE KEY NOTES ARE THE DESCRIPTIONS OF THE WORK OF THE CONTRACT. THERE MAY BE KEY NOTES LISTED THAT DO NOT APPEAR ON ANY DRAWING ON THIS SHEET. KEY NOTES DO NOT APPLY UNLESS THEY APPEAR ON THE DRAWING, LEGEND, OR BY REFERENCE TO OTHER DRAWINGS.
5. UPGRADE LIGHT FIXTURES PER ELECTRICAL.
6. PROVIDE SEISMIC BRACING AS REQUIRED TO ALL CEILING MOUNTED LIGHT FIXTURES & OTHER DEVICES.
7. PROVIDE OCCUPANCY SENSORS IN ALL TOILETS & CLASS ROOMS.
8. PROVIDE DAYLIGHTING (AUTOMATIC) CONTROLS FOR INTERIOR LIGHTING SYSTEM.
9. PROVIDE DUAL SWITCHING IN ALL CLASSROOMS.
10. REFER TO ELECTRICAL LIGHTING PLAN & FIXTURE SCHEDULE FOR FIXTURE TYPE AND MOUNTING INFORMATION.
11. ALL CEILING HEIGHTS INDICATED ARE FROM TOP OF CONC. FLOOR SLAB TO UNDERSIDE OF FINISH CEILING
12. UPGRADE EXIT LIGHTS AND EMERGENCY EGRESS LIGHTING PER ELECTRICAL

RENOVATION KEYNOTES:

1. TILE ON FLOOR AND WALLS. SEE 20/A2.6
2. FOR REFLECTED CEILING PLAN, SEE 21/A2.6
3. ACCESSIBLE DRINKING FOUNTAIN SEE 19/A2.6
4. ACCESSIBLE THRESHOLDS @ EXTERIOR DOORS
5. ACCESSIBLE RESTROOM SIGNAGE, SEE 28/A9.01
6. NOT USED
7. ACCESSIBLE PLUMBING FIXTURE (SEE PLUMBING DWGS)
8. INSULATION AND JACKET ON WASTE PIPING & HOT WATER SUPPLY.
9. TOILET PARTITION
10. NEW DOOR & FRAME
11. NEW WALL. SEE 21/A9.03

NOTE: SEE 21/A2.5 FOR RENOVATION NOTES

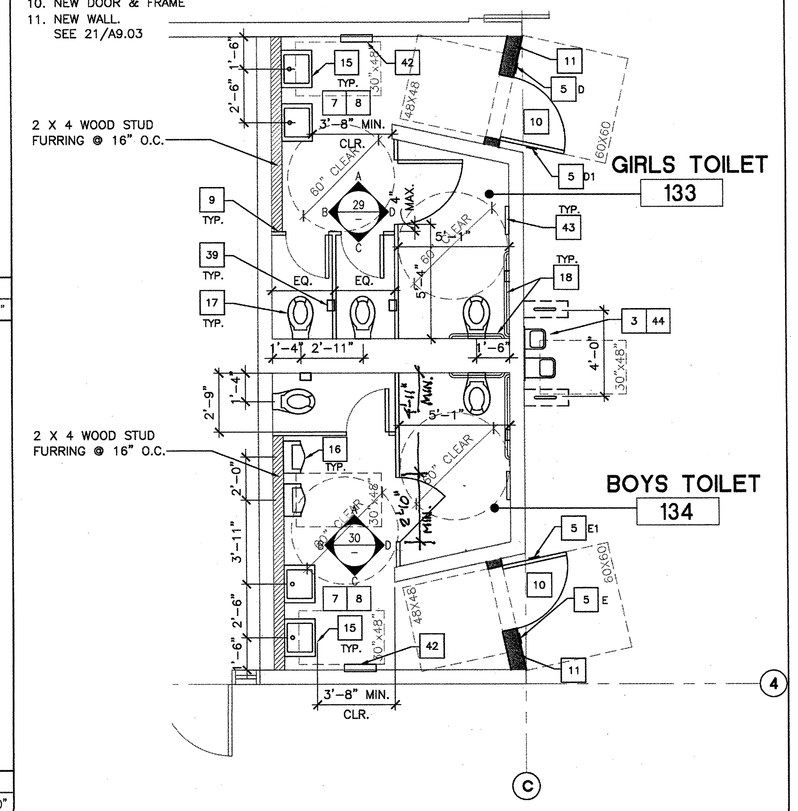

18 (E) BUILDING 7 BOYS & GIRLS RESTROOM RENO PLAN

10021M_07_XFP01.DWG

SCALE: 1/4" = 1'-0"

DEMOLITION KEYNOTES:

1. DEMO ENTIRE RESTROOM ACCESSORIES INCLUDING PLUMBING FIXTURES, TOILET PARTITIONS, AND FLOOR AND WALL FINISHES. PREPARE FOR FIXTURES, ACCESSORIES AND FINISHES.
2. EXISTING GYPSUM BOARD CEILING TO REMAIN
3. NOT USED
4. NOT USED
5. REPLACE (E) D.FS WITH HI-LO D.FS, SEE PLUMBING DWGS.
6. REMOVE DOOR

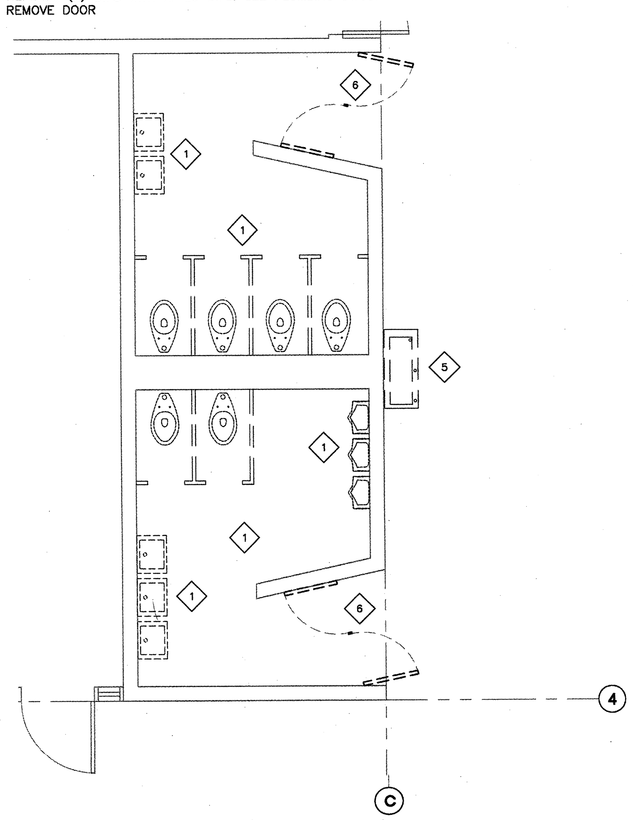

8 (E) BUILDING 7 BOYS&GIRLS RESTROOM DEMO PLAN

10021M_07_XFP01.DWG

SCALE: 1/4" = 1'-0"

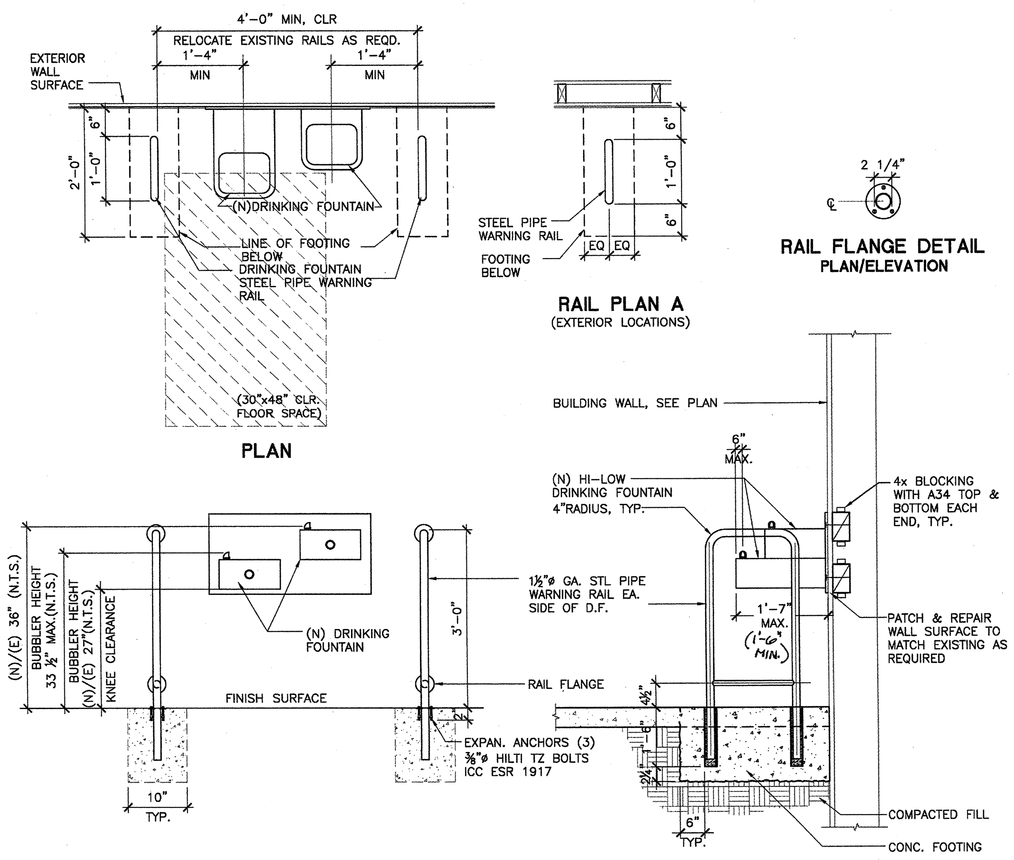

19 ACCESSIBLE HI-LO DRINKING FOUNTAIN

D15-DF-101.dwg

SCALE: 3/4"=1'-0"

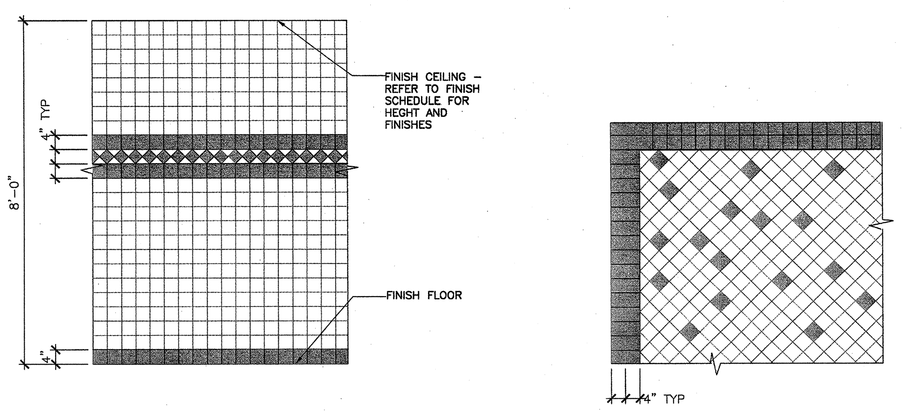

20 FINISH FLOOR AND WALL PATTERN

SCALE: X

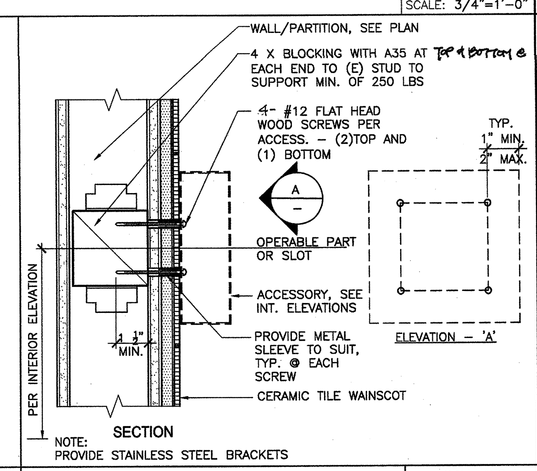

NOTE: PROVIDE STAINLESS STEEL BRACKETS

1 TOILET ACCESSORY BACKING

WALLHANG.dwg

SCALE: 3"=1'-0"

SANTA ANA UNIFIED SCHOOL DISTRICT

gkkworks

2355 Main Street Suite 220
Irvine | CA 92614
949 250 1500
949 955 2708 fax

Architect Seal

LICENSED ARCHITECT GUILLERMO AGUILAR NO. C13165 REN.: MAY. 2011 STATE OF CALIFORNIA

Consultant and Seal

Agency Approval

IDENTIFICATION STAMP
DIV. OF THE STATE ARCHITECT
APPL. 04-110031
AC FLS SS RH
DATE NOV 24 2009

No.	Date	Revision/Issue
	12/08/08	DSA SUBMITTAL
	02/11/09	DSA SUBMITTAL
	5/11/09	DSA BACKCHECK
	12/15/2011	BID SET

Project Name

MUIR FUNDAMENTAL SCHOOL MODERNIZATION

1951 MABURY ST.
SANTA ANA, CA 92705

Checked By: BA

Drawn By: AF

Sheet Title: ENLARGED TOILET ROOM PLAN, DETAILS & ELEVATIONS (TYPICAL)

Sheet Number: A2.6

Project Number: 10021-010

Scale: AS NOTED

© 2009 gkkworks, All Rights Reserved
NO PART OF THE CONTENTS OF THIS DOCUMENT MAY BE REPRODUCED OR TRANSMITTED IN ANY FORM OR BY ANY MEANS WITHOUT THE WRITTEN PERMISSION OF GKKWORKS.

K:\Santa Ana USD\10021-010_Muir Fundamental\Deliverables\CAD\A_Arch\10021_010_A-2.6.dwg 11/09/2009