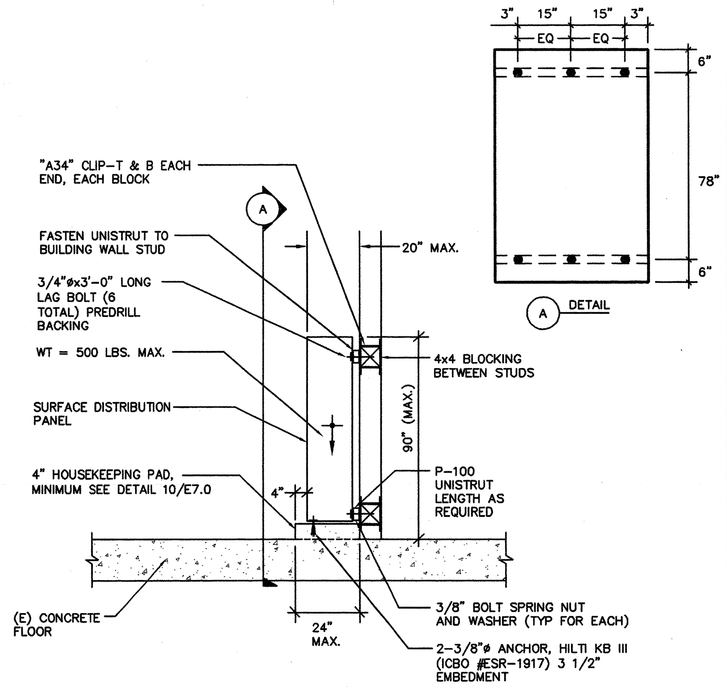

ELECTRICAL EQUIPMENT ANCHORAGE DETAIL — NTS — 10

NOT USED — NTS — 7

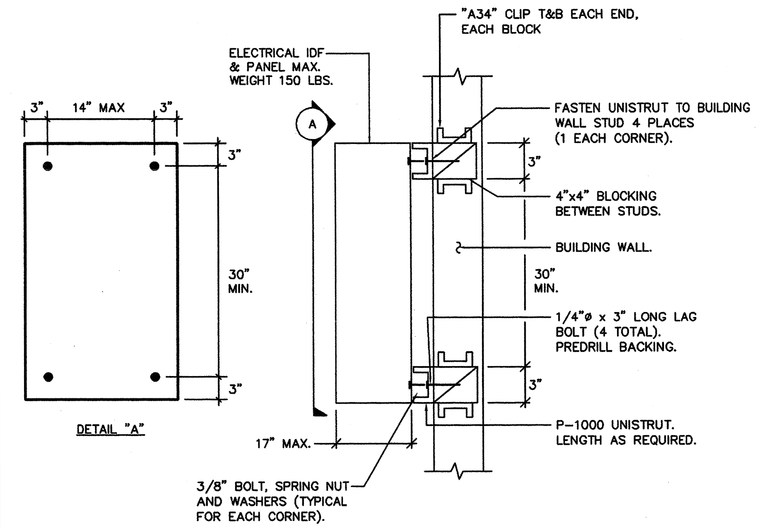

SURFACE MOUNTED

PANEL/CABINET ON WOOD FRAMING — NTS — 4

MIN.

NOT USED — NTS — 1

KEY NOTES:

1. WALL CONSTRUCTION:
   A. EXTERIOR WOOD STUDS PER ARCHITECTURAL/STRUCTURAL.
   B. 5/8" TYPE X GYPSUM BOARD PER ARCHITECTURAL.
2. CONDUIT SIZE PER DRAWINGS.
3. FIRE STOP SYSTEM – ONE HOUR CAULK. APPLY TO INTERFACE WITH WALL SURFACE.

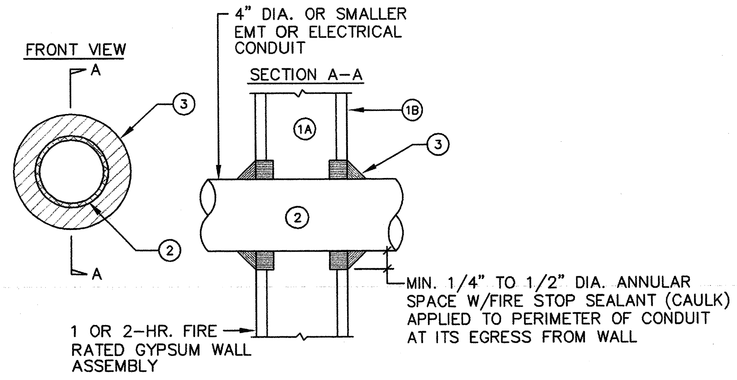

U.L. SYSTEM NO. WL 1001

NOTE: MAX. DIA. OF OPENING IS 13 1/2" ANNULAR SPACE OF MIN. 1/4" DIA. BEAD IS REQUIRED.

COND. PENET. THRU 1 OR 2-HR FIRE/SMOKE WALL DET. — NTS — 2

- — NTS — 11

CONDUIT SEISMIC SEPARATION JOINT DET. — NTS — 8

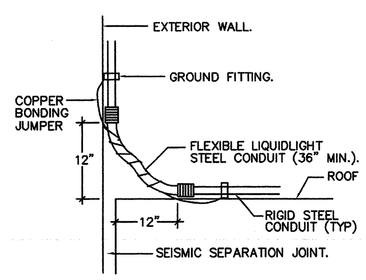

- — NTS — 5

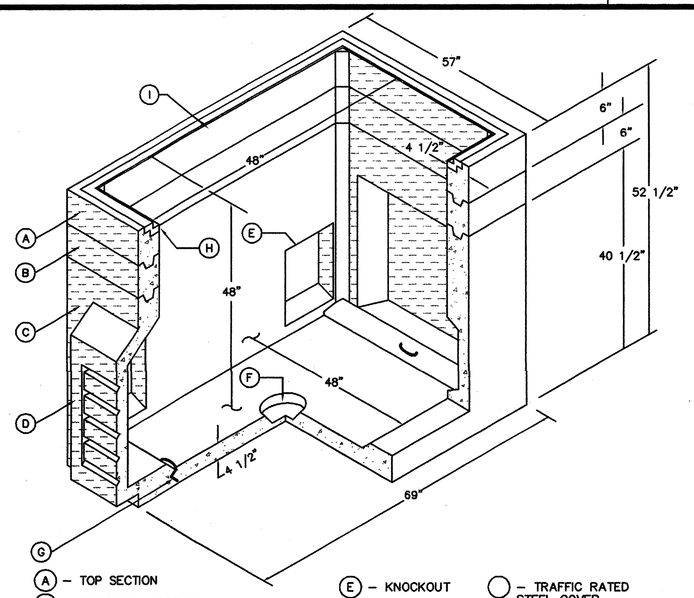

(A) – TOP SECTION
(B) – EXTENSION SECTION
(C) – BOTTOM SECTION
(D) 1'-6" X 2'--2 1/2" X 1'-0" DEEP DUCT
(E) – KNOCKOUT
(F) – SUMP
(G) – PULL IRONS
(H) – ARMOR FRAME
(I) – TRAFFIC RATED STEEL COVER
(J) 3/4"ø x 10'-0" COPPER CLAD GROUND ROD, GROUND ALL EXPOSED METAL PARTS WITH BARE COPPER #6 MINIMUM.

NOTES:

1. ASSEMBLY TO BE PLACED ON 12" BASE COMPACTED ROCK TO INSURE UNIFORM DISTRIBUTION OF SOIL PRESSURE ON FLOOR.
2. UNIT SHALL BE FABRICATED IN A CERTIFIED PRECAST PLANT.

4'x4'x4' DEEP PULLBOX — NTS — 12

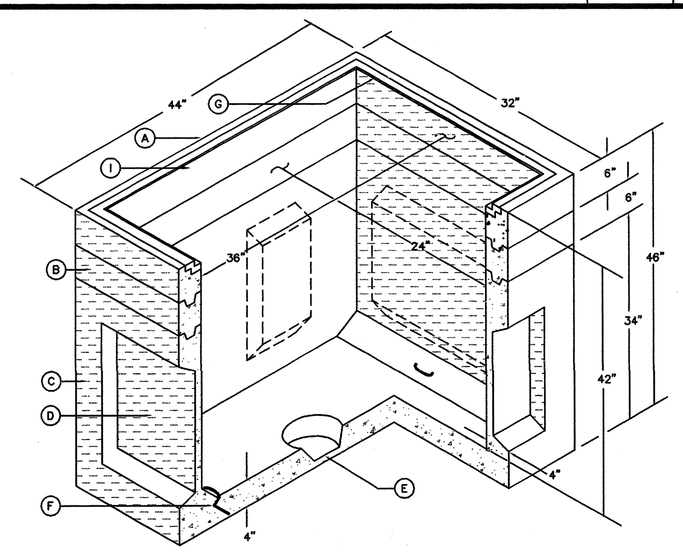

(A) – TOP SECTION
(B) – EXTENSION SECTION
(C) – BOTTOM SECTION
(D) – KNOCKOUT
(E) – SUMP
(F) – PULL IRONS
(G) – ARMOR FRAME
(I) – TRAFFIC RATED STEEL COVER
(J) 3/4"ø x 10'-0" COPPER CLAD GROUND ROD, GROUND ALL EXPOSED METAL PARTS WITH BARE COPPER #6 MINIMUM.

NOTES:

1. ASSEMBLY TO BE PLACED ON 12" BASE COMPACTED ROCK TO INSURE UNIFORM DISTRIBUTION OF SOIL PRESSURE ON FLOOR.
2. UNIT SHALL BE FABRICATED IN A CERTIFIED PRECAST PLANT.

2'x3'x3'-6" DEEP PULLBOX — NTS — 9

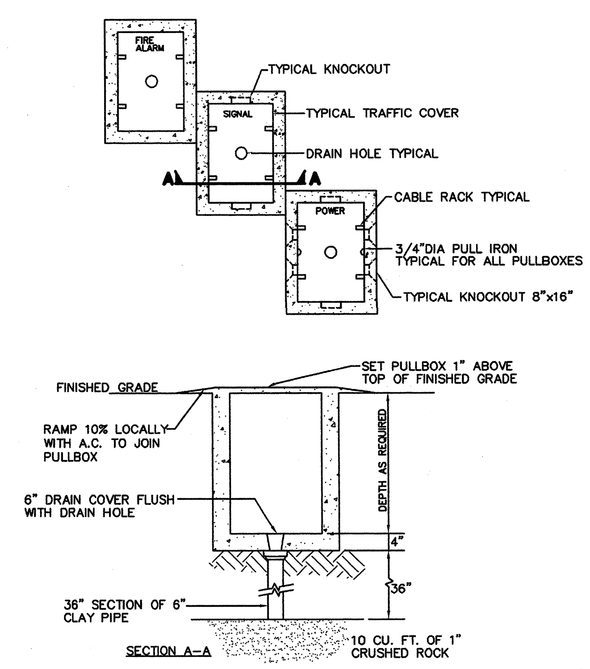

PRE-CAST CONCRETE PULLBOXES — NTS — 6

- — NTS — 3

N:\20.CAD\TTG_Projects\2008\2008-125-00\Mpa\E7-1.dwg 11/13/2009

SANTA ANA UNIFIED SCHOOL DISTRICT

gkkworks
2355 Main Street Suite 220
Irvine | CA 92614
949 250 1500
949 955 2708 fax

Architect Seal

LICENSED ARCHITECT GUILLERMO AGUILAR NO. C13165 REN.: MAY. 2011 STATE OF CALIFORNIA

Consultant and Seal

TMAD TAYLOR & GAINES
• STRUCTURAL • MECHANICAL • ELECTRICAL • CIVIL
800 North Ferrari Lane, Suite 100
Ontario, California 91764
Phone: 909.477.6915 Fax: 909.477.6916
Project No. 2008.125.00

REGISTERED PROFESSIONAL ENGINEER NESTOR C. IGNACIO JR. Lic. E16934 Exp. 6-30-2011 ELECTRICAL STATE OF CALIFORNIA

Agency Approval

IDENTIFICATION STAMP
DIV. OF THE STATE ARCHITECT
APPL. 04-110031
AC FLS DW SS RH
DATE NOV 24 2009

No.	Date	Revision/Issue
	12/08/08	DSA SUBMITTAL
	02/11/09	DSA SUBMITTAL
	5/11/09	DSA BACKCHECK
	12/15/2011	BID SET

Project Name

MUIR FUNDAMENTAL SCHOOL MODERNIZATION
1951 MABURY ST.
SANTA ANA, CA 92707

Checked By	Drawn By
RA	KA

Sheet Title

DETAILS

Sheet Number

E7.1

Project Number	Scale
10021-010	AS S

©2009 gkkworks, All Rights Reserv
NO PART OF THE CONTENTS OF THIS D
REPRODUCED OR TRANSMITTED IN ANY
MEANS WITHOUT THE WRITTEN PERMISS