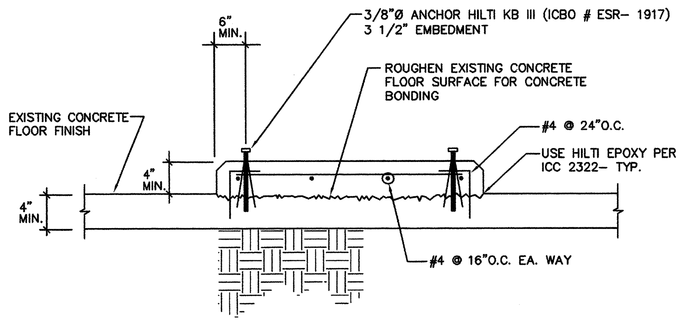

NOTES: COORD. WITH MANUFACTURER FOR THE FOLLOWING:

1. LOCATION AND DIMENSIONS OF PADS.
2. COORD. WITH MANUF. FOR LOCATION OF RAIL FOOTPRINT AND ANCHORAGE.

CONCRETE EQUIPMENT PAD NTS **10**

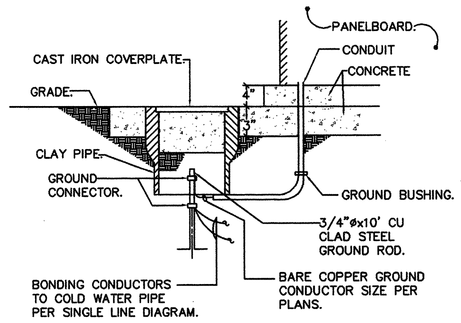

GROUND ROD DETAIL NTS **7**

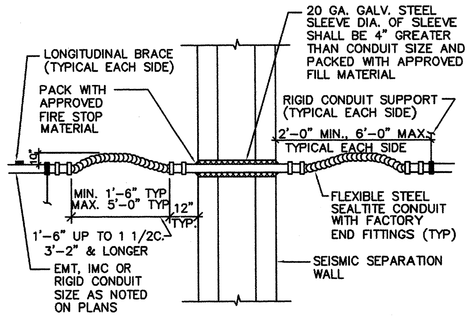

CONDUIT THRU SEISMIC SEPARATION DETAIL NTS **4**

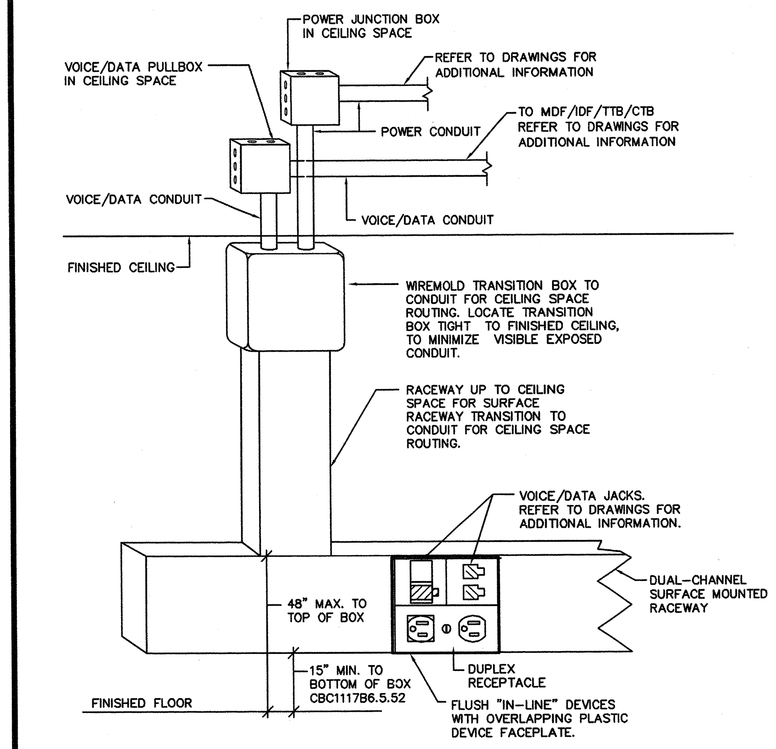

SURFACE RACEWAY (WIREMOLD) NTS **1**

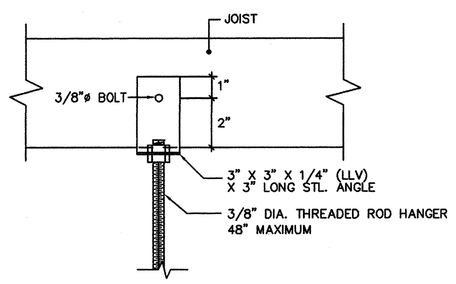

DETAIL "A"

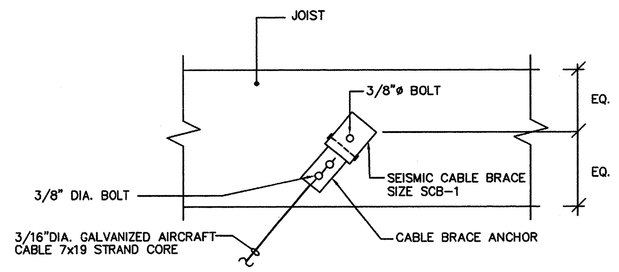

DETAIL "B"

SEISMIC BRACE DETAIL NTS **11**

NOT USED NTS **8**

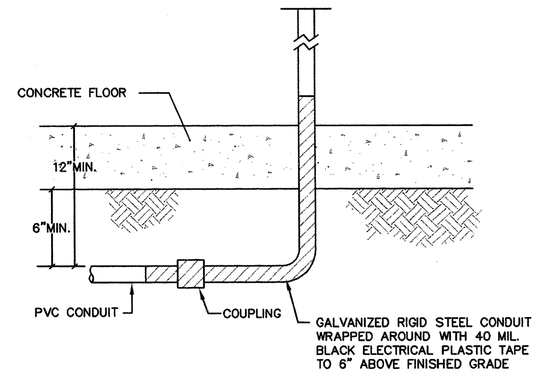

COND. INSTALLED BELOW CONC. INSIDE BLDG NTS **5**

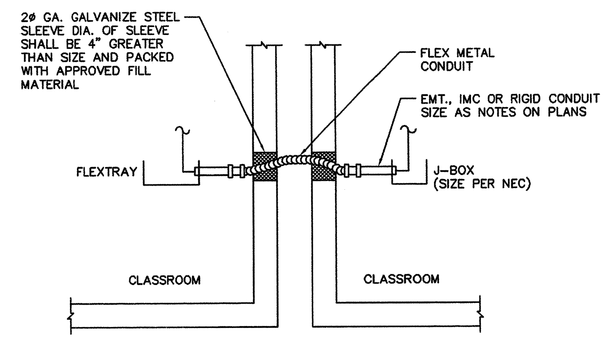

FLEXIBLE METAL CONDUIT BETWEEN BUILDINGS DETAIL NTS **2**

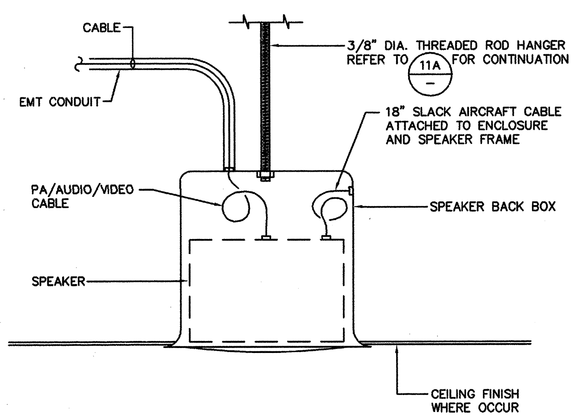

TOTAL WEIGHT = 15LBS.

SPEAKER MOUNTING DETAIL NTS **12**

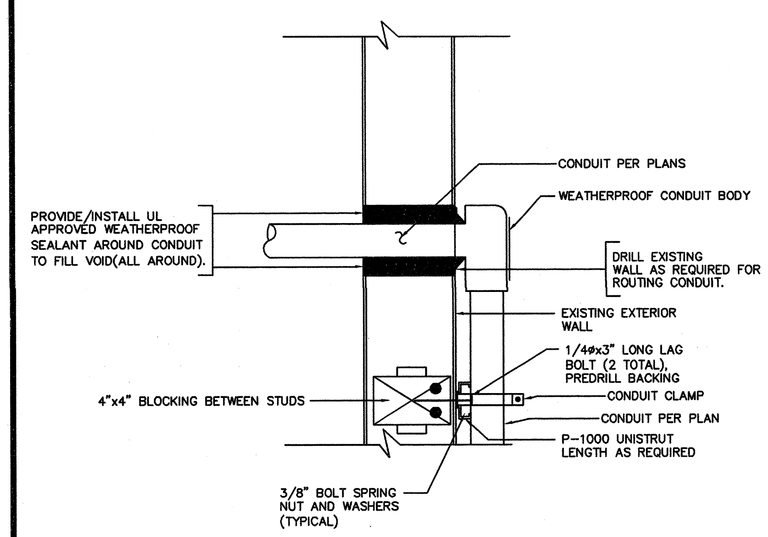

CONDUIT PENETRATION AT WOOD EXTERIOR WALL NTS **9**

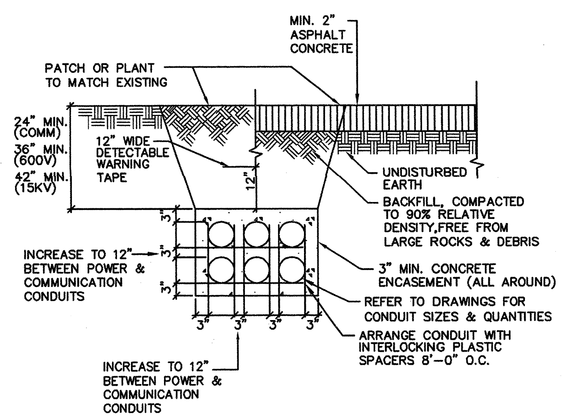

UNDERGRD. MULTI-COND. PLACEMENT NTS **6**

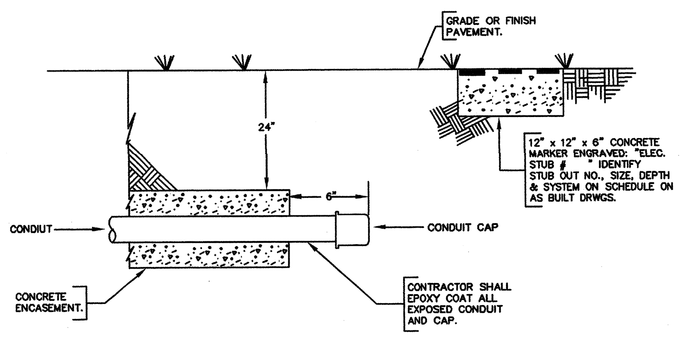

CONDUIT STUB-OUT DETAIL NTS **3**

N:\20.CAD\TTG_Projects\2008\2008-125-00\Mpe\E7-0.dwg 11/13/2009

SANTA ANA UNIFIED SCHOOL DISTRICT

gkkworks
2355 Main Street Suite 220
Irvine | CA 92614
949 250 1500
949 955 2708 fax

Architect Seal

LICENSED ARCHITECT GUILLERMO AGUILAR NO. C13165 REN.: MAY. 2011 STATE OF CALIFORNIA

Consultant and Seal

TMAD TAYLOR & GAINES
• STRUCTURAL • MECHANICAL • ELECTRICAL • CIVIL
800 North Ferrari Lane, Suite 100
Ontario, California 91764
Phone: 909.477.6915 Fax: 909.477.6916

Project No. 2008.125.00

REGISTERED PROFESSIONAL ENGINEER NESTOR C. IGNACIO Lic. E16934 Exp. 6-30-2011 ELECTRICAL STATE OF CALIFORNIA

Agency Approval

IDENTIFICATION STAMP
DIV. OF THE STATE ARCHITECT
APPL. 04-110031
AC FLS SS
DATE NOV 24 2009

No.	Date	Revision/Issue
	12/08/08	DSA SUBMITTAL
	02/11/09	DSA SUBMITTAL
	5/11/09	DSA BACKCHECK
	12/15/2011	BID SET

Project Name

MUIR FUNDAMENTAL SCHOOL MODERNIZATION
1951 MABURY ST.
SANTA ANA, CA 92707

Checked By: RA
Drawn By: KA

Sheet Title

DETAILS

Sheet Number

E7.0

Project Number: 10021-010
Scale: AS SHOWN

© 2009 gkkworks, All Rights Reserved
NO PART OF THE CONTENTS OF THIS DOCUMENT MAY BE REPRODUCED OR TRANSMITTED IN ANY FORM OR BY ANY MEANS WITHOUT THE WRITTEN PERMISSION OF GKKWORKS.