KEY NOTES

1. PROVIDE/INSTALL NEW CIRCUIT BREAKER IN EXISTING SPACE. NEW CIRCUIT BREAKER SHALL BE COMPATIBLE WITH
2. PROVIDE/INSTALL CIRCUIT BREAKER MOUNTING KIT.

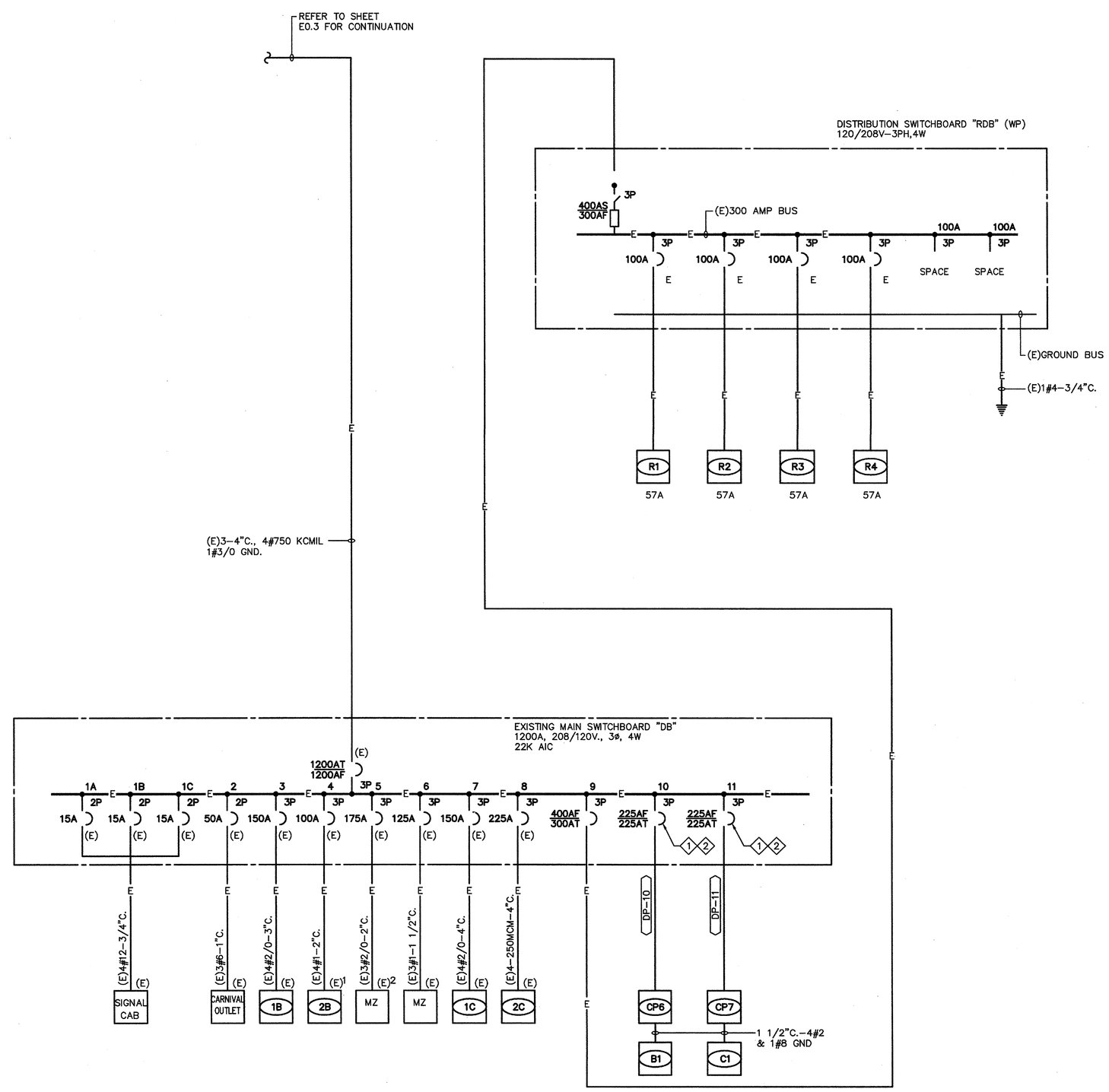

LOAD SUMMARY AND FEEDER SCHEDULE " DB " (EXISTING)

LOCATION ELECTRICAL ROOM

VOLTAGE 205/120V,3ø,4W. 22,000 AIC SYM 1200 AMP BUS 1200 MAIN C.B.

FEEDER NUMBER	FEEDER FROM	FEEDER TO	FEEDER SIZE (BASED ON THW COPPER)	CONNECTED LOAD AMPS.	CONNECTED LOAD K.V.A.	%VD	REMARKS
			EXISTING LOAD	528.0	190.1	–	–
DP-10	DP	CP6	2 1/2"C., 4#4/0, 1#4 GND.	121.7	43.8	–	–
DP-11	DP	CP7	2 1/2"C., 4#4/0, 1#4 GND.	115.0	41.4	–	–
			SUBTOTAL	764.7	275.3		
			25% OF LARGEST MOTOR	–	–		
			TOTAL LOAD	764.7	275.3		

TMAD Engineers, Inc
Consulting Mechanical & Electrical Engineers

ELECTRICAL CALCULATION

A. EXISTING CONNECTIONS = 834.5 KVA

B. NEW ADDITIONAL LOAD = 44.8 KVA

TOTAL LOAD = 879.3 KVA

I = 2442.5AMP. @ 208/120V., 3ø, 4W

.: EXISTING 3000 AMPS. MAIN SWITCHBOARD "MSB" IS TILL ADEQUATE.

SANTA ANA UNIFIED SCHOOL DISTRICT

gkkworks
2355 Main Street Suite 220
Irvine | CA 92614
949 250 1500
949 955 2708 fax

Architect Seal
LICENSED ARCHITECT GUILLERMO AGUILAR NO. C13165 REN.: MAY. 2011 STATE OF CALIFORNIA

Consultant and Seal
TMAD TAYLOR &GAINES
• STRUCTURAL • MECHANICAL • ELECTRICAL • CIVIL
800 North Ferrari Lane, Suite 100
Ontario, California 91764
Phone: 909.477.6915 Fax: 909.477.6916
Project No. 2008.125.00
REGISTERED PROFESSIONAL ENGINEER RAYMOND C. IGNACIO, JR. Lic. E16934 Exp. 6-30-2011 ELECTRICAL STATE OF CALIFORNIA

Agency Approval

IDENTIFICATION STAMP
DIV. OF THE STATE ARCHITECT
APPL. 04-110031
AC FLS SS RH
DATE NOV 24 2009

No.	Date	Revision/Issue
	12/08/08	DSA SUBMITTAL
	02/11/09	DSA SUBMITTAL
	5/11/09	DSA BACKCHECK
	12/15/2011	BID SET

Project Name

MUIR FUNDAMENTAL SCHOOL MODERNIZATION
1951 MABURY ST.
SANTA ANA, CA 92707

Checked By: RA
Drawn By: JHC

Sheet Title

SINGLE LINE DIAGRAM

Sheet Number

E0.4

Project Number: 10021-010-00
Scale: NONE

©2009 gkkworks, All Rights Reserved
NO PART OF THE CONTENTS OF THIS DOCUMENT MAY BE REPRODUCED OR TRANSMITTED IN ANY FORM OR BY ANY MEANS WITHOUT THE WRITTEN PERMISSION OF GKKWORKS.

N:\20.CAD\TTG_Projects\2008\2008-125-00\Mpe\E0-4.dwg 10/02/2009