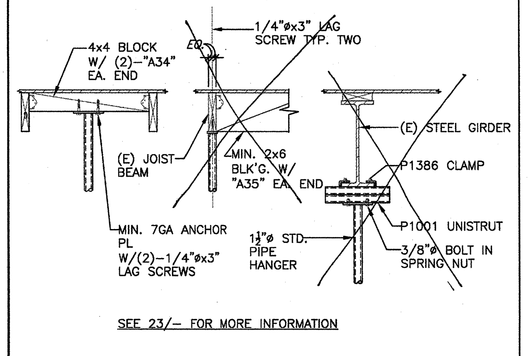

30 TYP. PROJECTOR HANGER SUPPORT — SCALE: 3/4"=1'-0"

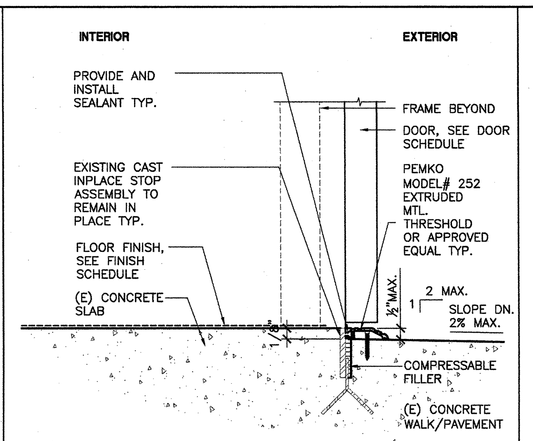

25 EXT. THRESHOLD FLUSH — D08-DR-THRD101.dwg — SCALE: 3"=1'-0"

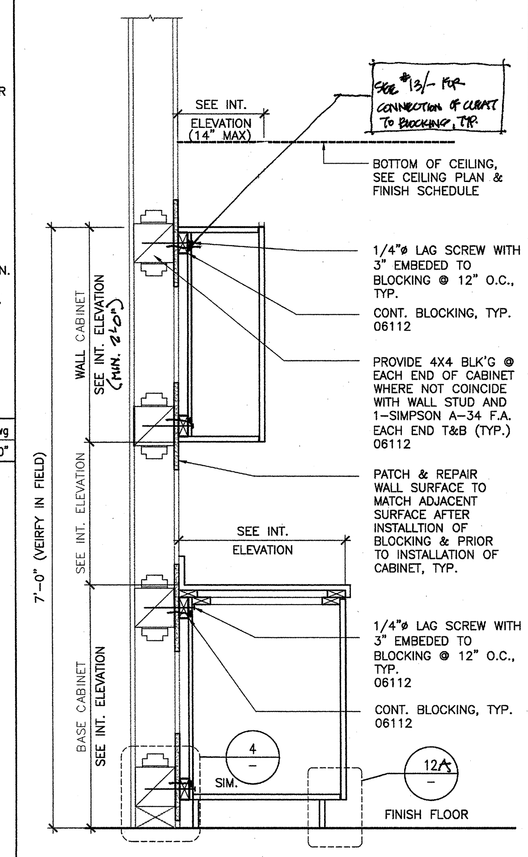

NOTE: LEVEL ALL CASEWORK, SHIMMING REQUIRED

19 WALL & BASE CABINET ANCHOR — D06-CAB-101.dwg — SCALE: 1"=1'-0"

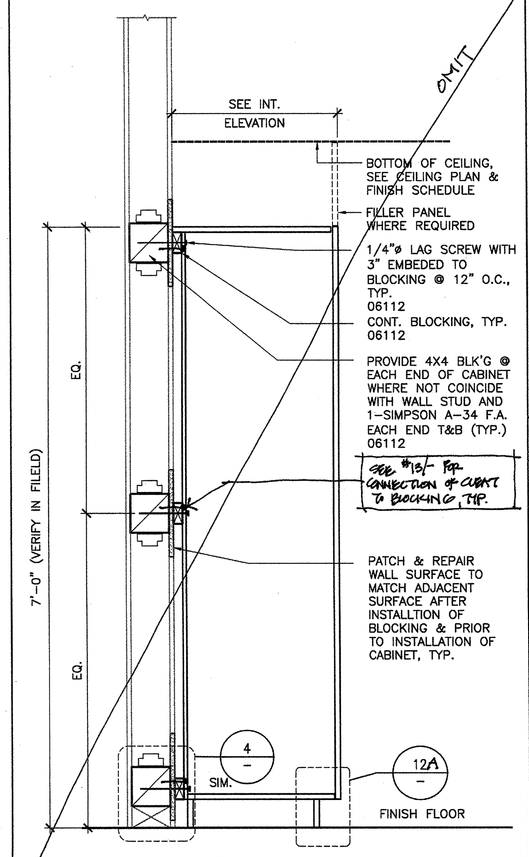

NOTE: LEVEL ALL CASEWORK, SHIMMING REQUIRED

14 TALL CABINET ANCHOR — D06-CAB-102.dwg — SCALE: 1"=1'-0"

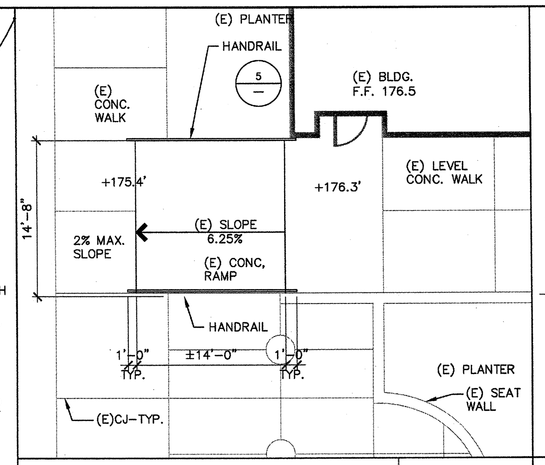

10 BLDG. 2 ACCESS RAMP — SCALE: 1/8"=1'-0"

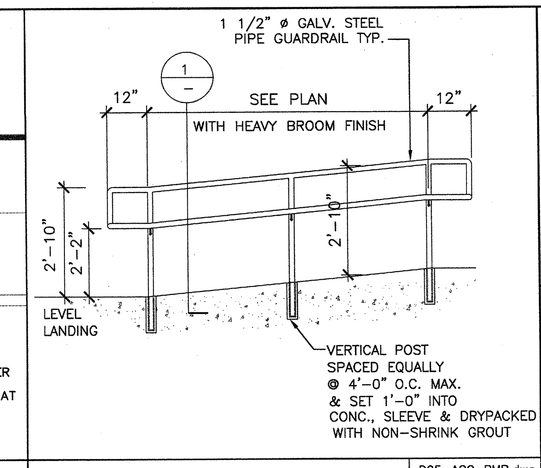

5 ACCESS RAMP HANDRAIL — D05-ACC-RMP.dwg — SCALE: NTS

NOTES:
1) VAPOR BARRIER SHALL BE SEALED AT EDGES
2) REFER TO MECH. PLAN FOR LOCATIONS

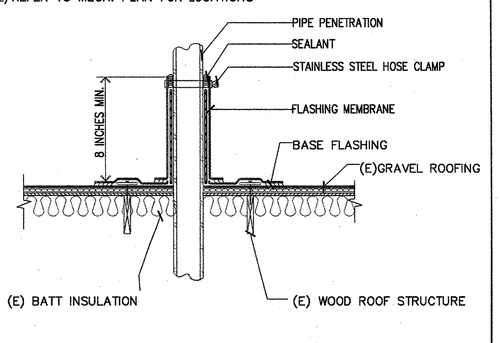

29 PIPE PENETRATION FLASHING — D_PIPE-PENETR.DWG — SCALE: 1-1/2"=1'-0"

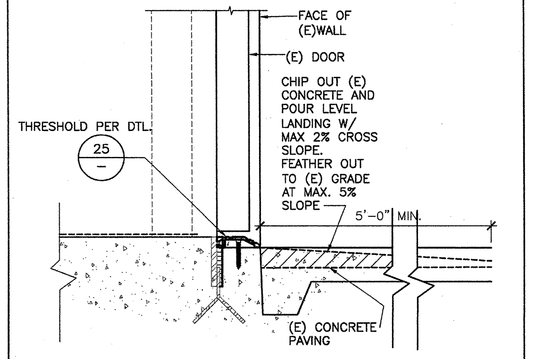

24 LANDING SECTION — D08-DR-THRD101.dwg — SCALE: 3"=1'-0"

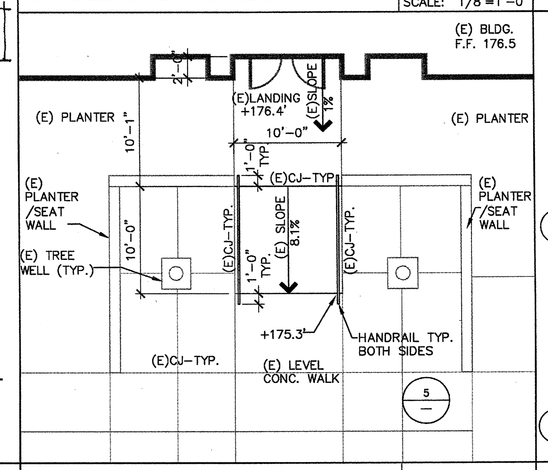

9 BLDG. 1 ACCESS RAMP — SCALE: 1/8"=1'-0"

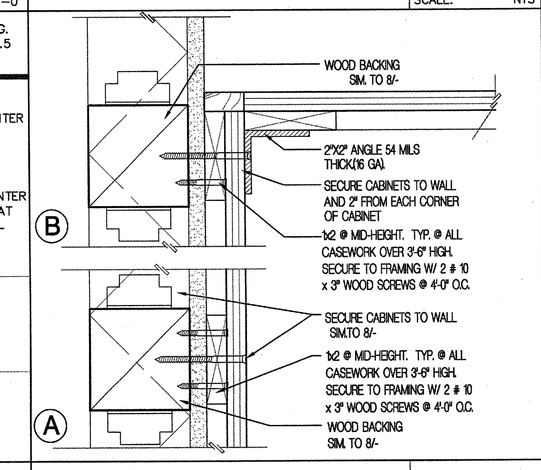

4 CABINET MOUNTING — SCALE: 3"=1'-0"

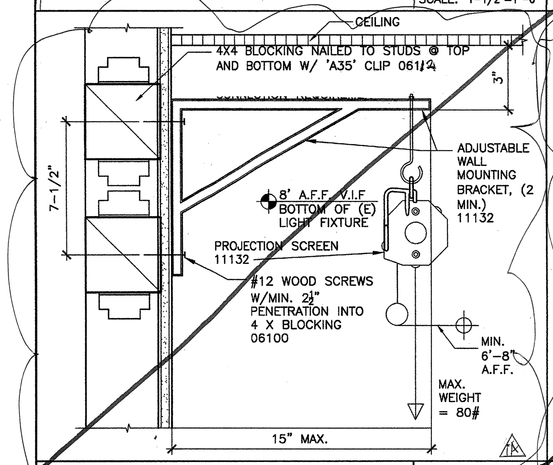

28. ~~PROJECTION SCREEN~~ N.I.O. — D11-PRSCREEN-101.dwg — SCALE: 3"=1'-0"

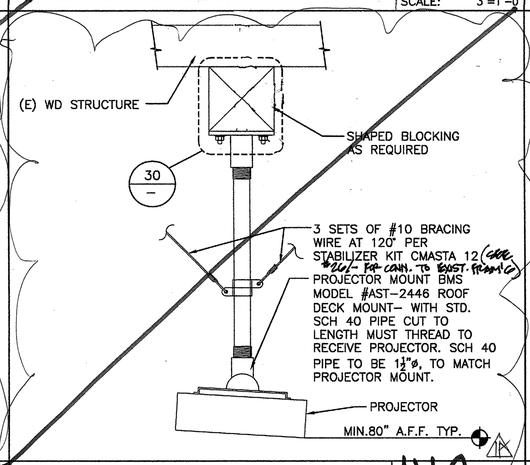

23 ~~PROJECTOR MOUNTING~~ N.I.O. — SCALE: NTS

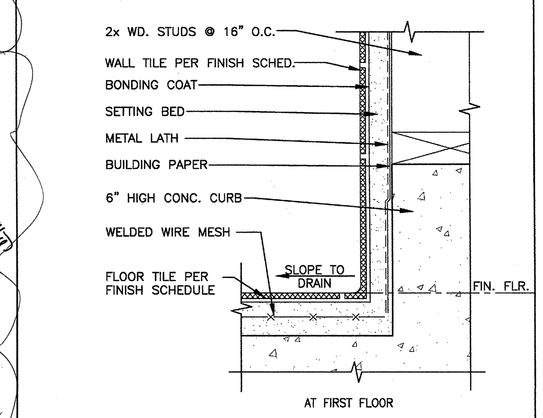

18 TILE BASE/WALL — SCALE: NTS

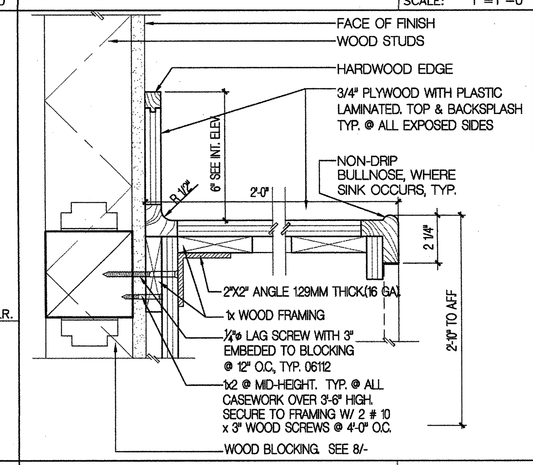

13 COUNTER TOP — SCALE: 3"=1'-0"

NOTE: ALL BLOCKING AND BACKING BY CONTRACTOR TYP.

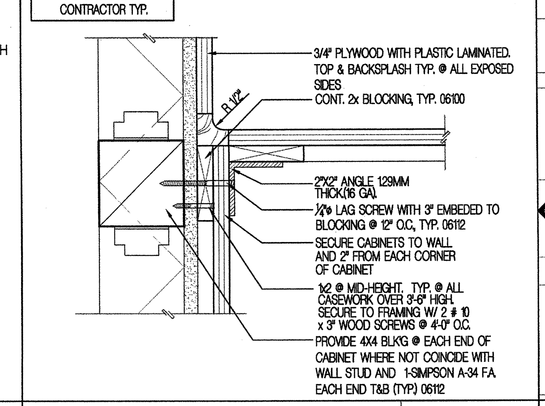

8 BACKING — SCALE: 3"=1'-0"

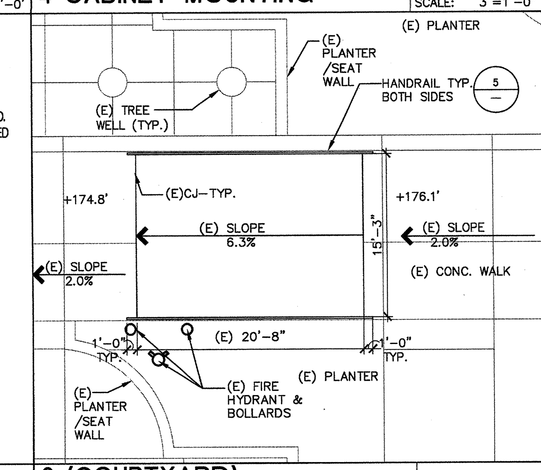

3 (COURTYARD) ACCESS RAMP — SCALE: 1/8"=1'-0"

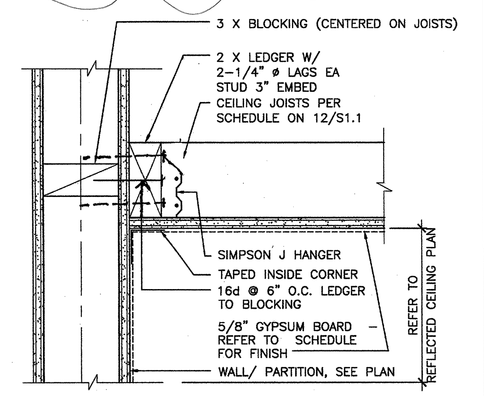

27 GYPSUM BOARD CEILING — SCALE: 3"=1'-0"

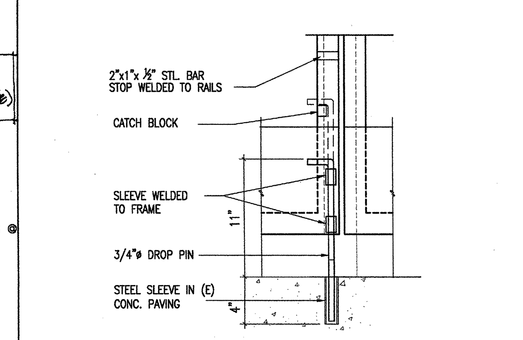

NOTE : ALL MATERIAL TO BE GALVANIZED STEEL PAINTED

17 CANE BOLT — SCALE:1-1/2"=1'-0"

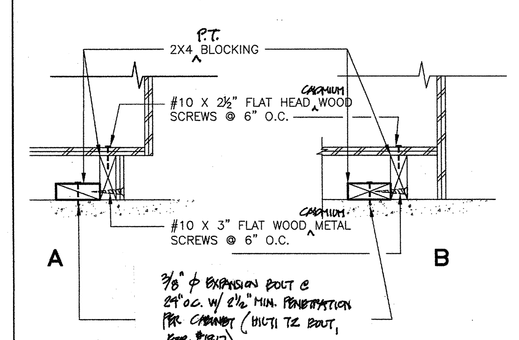

12 ANCHOR BASE — SCALE:1-1/2"=1'-0"

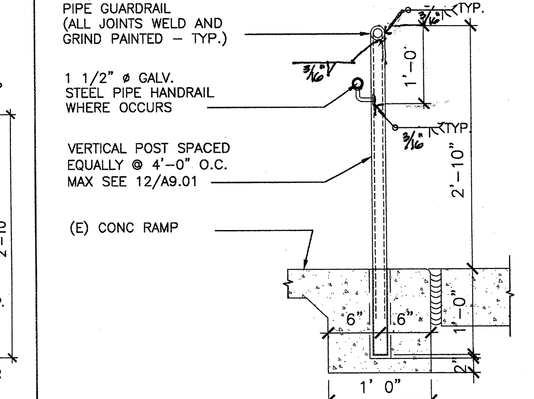

7 BASE CABINET — SCALE: 1"=1'-0"

26 WIRE CONNECTION TO WOOD FRAMING — SCALE: 3"=1'-0"

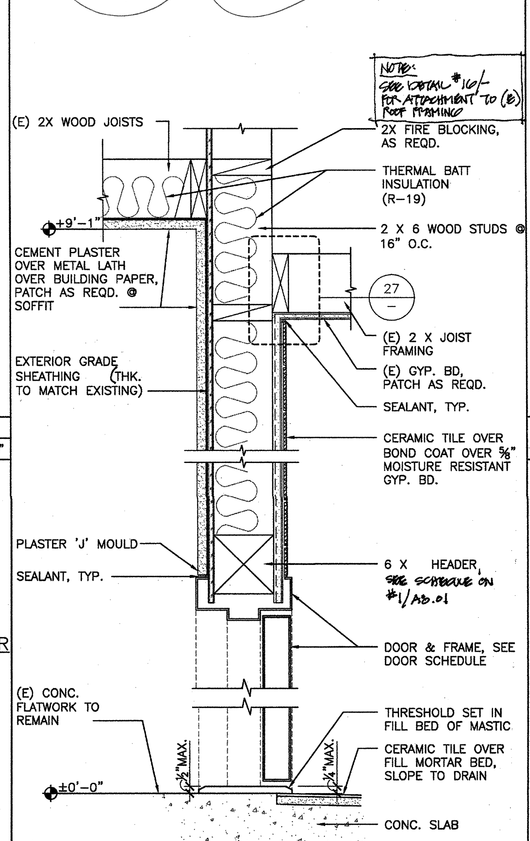

21 WALL TYPE - 1 — SCALE:1-1/2"=1'-0"

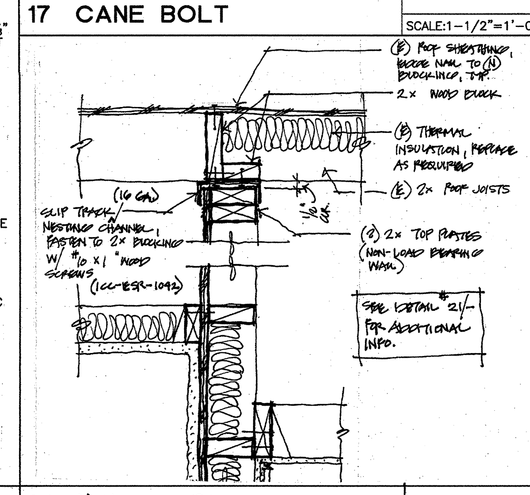

16 NON-LOAD BEARING WALL — SCALE: N.T.S.

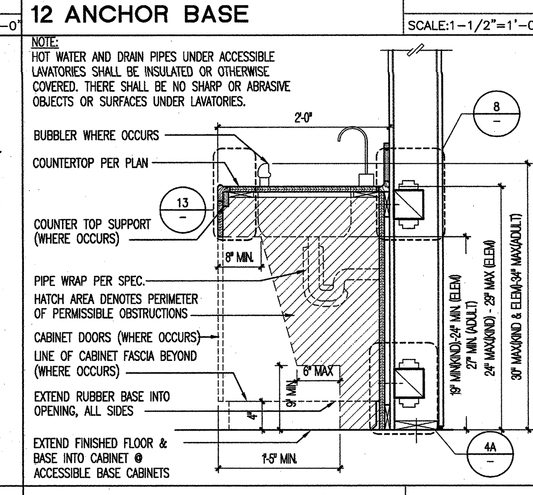

11 BASE CABINET W/ SINK — SCALE: 1"=1'-0"

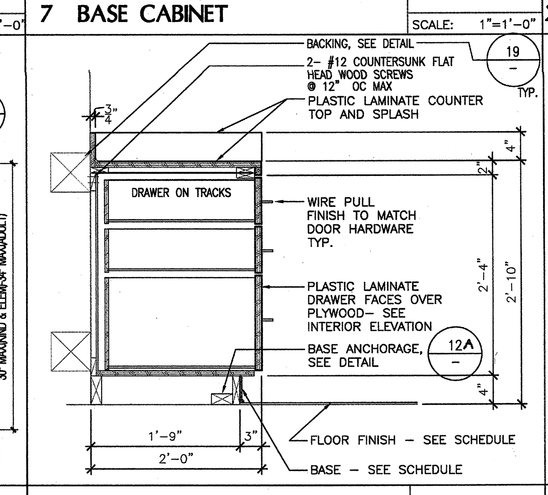

6 BASE CABINET — SCALE: 1"=1'-0"

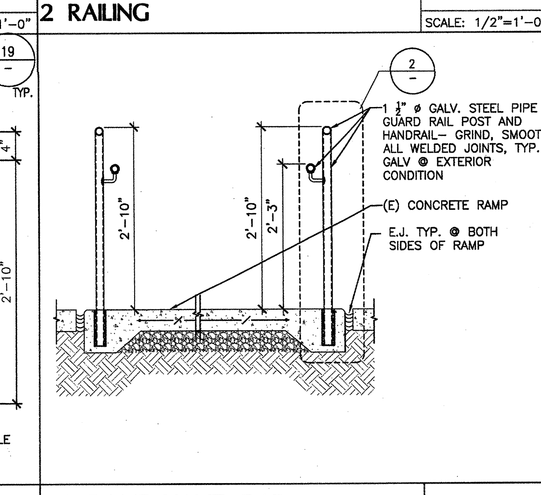

1 RAMP HAND RAIL — SCALE: 3/4"=1'-0"

Y:\10021-000-00 SAUSD Modernization\Muir Fundamental School_Tc_USA\091107\10021_010_A-9.03.dwg 11/09/2009

SANTA ANA UNIFIED SCHOOL DISTRICT

gkkworks
2355 Main Street Suite 220
Irvine | CA 92614
949 250 1500
949 955 2708 fax

Architect Seal

LICENSED ARCHITECT GUILLERMO AGUILAR NO. C13165 REN.: MAY 2011 STATE OF CALIFORNIA

Consultant and Seal

Agency Approval

IDENTIFICATION STAMP
DIV. OF THE STATE ARCHITECT
APPL. 04-110031
AC SS FLS SS RH
DATE NOV 24 2009

No.	Date	Revision/Issue
	12/08/08	DSA SUBMITTAL
	02/11/09	DSA SUBMITTAL
	5/11/09	DSA BACKCHECK
	12/15/2011	BID SET
1	12-16-2011	ADDENDUM 1A

Project Name

MUIR FUNDAMENTAL SCHOOL MODERNIZATION

1951 MABURY ST.
SANTA ANA, CA 92705

Checked By: BA
Drawn By: AF

Sheet Title

TYPICAL DETAILS AND SITE DETAILS

Sheet Number

A9.03

Project Number: 10021-010
Scale: AS NOTED

©2009 gkkworks, All Rights Reserved
NO PART OF THE CONTENTS OF THIS DOCUMENT MAY BE REPRODUCED OR TRANSMITTED IN ANY FORM OR BY ANY MEANS WITHOUT THE WRITTEN PERMISSION OF GKKWORKS.