TACTILE LETTERS AND NUMBERS:

1. WIDTH TO HEIGHT RATIO BETWEEN 3 : 5 AND 1 : 1.
2. STROKE WIDTH TO HEIGHT BETWEEN 1 : 5 AND 1 : 10.
3. CONTRAST CHARACTERS AND SYMBOLS WITH BACKGROUND.
4. RAISED 1/32" SANS SERIF UPPER CASE CHARACTERS W/ BRAILLE.

SIGNS / PICTOGRAMS

5. PICTOGRAMS / OUTSIDE DIMENSION OF PICTOGRAM FIELD SHALL BE 6" MINIMUM HEIGHT.
6. CHARACTERS AND BACKGROUNDS SHALL BE OF NON-GLARE CONTRASTING COLORS, AT LEAST 70% CONTRAST.
7. SIGNS / PICTOGRAMS INSTALLED ON THE WALL ADJACENT TO DOOR LEADING TO THE ROOM OR SPACE THEY DESCRIBE SHALL BE 60" A.F.F. TO ℄ OF SIGN AND WHERE A PERSON MAY APPROACH WITHIN 3" OF SIGNAGE WITHOUT ENCOUNTERING PROTRUDING OBJECTS OR STANDING WITHIN THE DOOR SWING AREA. (CBC 1117B.5.7)
8. VERTICAL CLEARANCE AT SUSPENDED SIGNS WITH MIN. HEADROOM OF 80" REQUIRE MIN. 3" CHARACTER HEIGHT MEASURED BY USING UPPERCASE "X" CHARACTERS AND NUMBERS SHALL BE SIZED ACCORDING TO VIEWING DISTANCE FROM WHICH READ. LOWER CASE CHARACTERS PERMITTED.

SIGN LOCATIONS:

9. ALL ACCESSIBLE ENTRANCES IDENTIFIED WITH MINIMUM OF ONE INTERNATIONAL SYMBOL OF ACCESSIBILITY (G)
10. ADDITIONAL DIRECTIONAL SIGNS ALONG ACCESSIBLE PATH OF TRAVEL ARE REQUIRED AS NEEDED TO DIRECT DISABLED PERSON TO ACCESSIBLE ROUTE.

INTERNATIONAL SYMBOL OF ACCESSIBILITY:

11. STANDARD USED TO IDENTIFY ACCESSIBLE FACILITIES.
12. WHITE FIGURE ON BLUE BACKGROUND, COLOR # 15090 ON FEDERAL STANDARD # 595B.
13. WHEN ENFORCING AGENCY DETERMINES, IF APPROPRIATE, SPECIAL DESIGNS AND COLORS MAY BE APPROVED.

BRAILLE:

14. USE CALIFORNIA CONTRACTED GRADE 2 BRAILLE. DOTS TO BE 0.1 INCH ON CENTER IN EACH CELL.
15. 0.2 INCH SPACE BETWEEN CELLS.
16. DOTS RAISED MINIMUM 0.025 INCH ABOVE BACKGROUND W/ ROUNDED OR DOMED TOPS.

NOTE:
LETTERS AND NUMERALS SHALL BE RAISED 1/32", UPPER CASE, SANS SERIF TYPE AND SHALL BE ACCOMPANIED WITH GRADE II BRAILLE IMMEDIATELY BELOW THE RAISED CHARACTERS. ALL RAISED CHARACTERS ARE WHITE ON A BLACK BACKGROUND. RAISED CHARACTERS SHALL BE AT LEAST 5/8" HIGH, BUT NO HIGHER THAN 2". CAR CONTROL BUTTONS TO BE RAISED 1/8" PLUS OR MINUS 1/32" ABOVE THE SURROUNDING SURFACE AND SHALL BE ILLUMINATED.

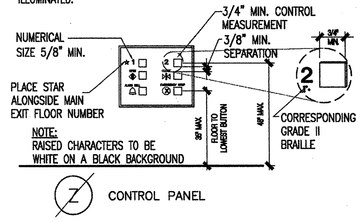

(Z) CONTROL PANEL

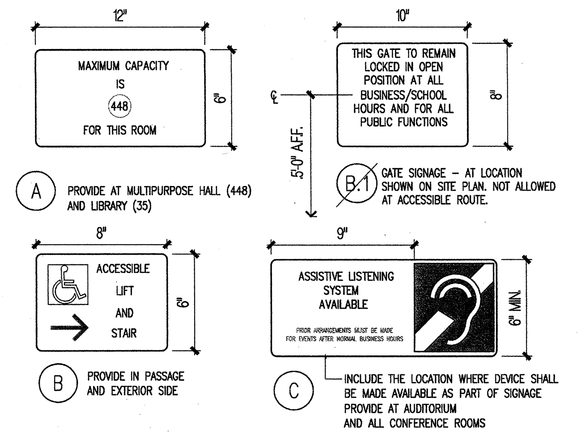

(A) PROVIDE AT MULTIPURPOSE HALL (448) AND LIBRARY (35)

(B1) GATE SIGNAGE – AT LOCATION SHOWN ON SITE PLAN. NOT ALLOWED AT ACCESSIBLE ROUTE.

(B) PROVIDE IN PASSAGE AND EXTERIOR SIDE

(C) INCLUDE THE LOCATION WHERE DEVICE SHALL BE MADE AVAILABLE AS PART OF SIGNAGE PROVIDE AT AUDITORIUM AND ALL CONFERENCE ROOMS

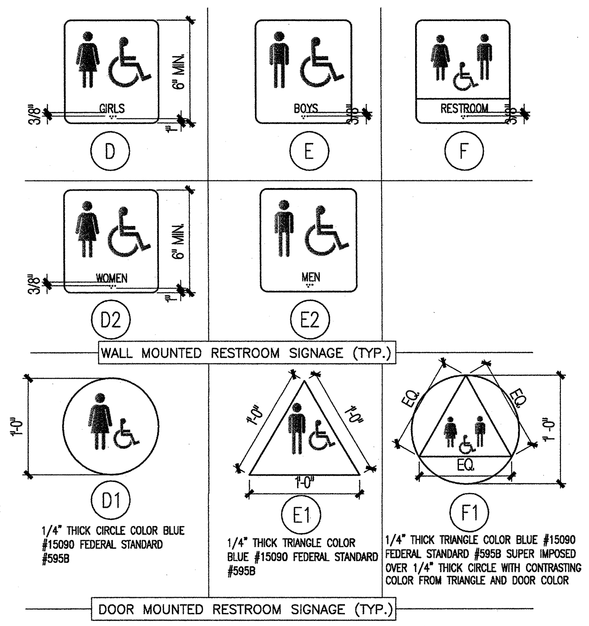

(D) (E) (F) (D2) (E2)

(D1) 1/4" THICK CIRCLE COLOR BLUE #15090 FEDERAL STANDARD #595B

(E1) 1/4" THICK TRIANGLE COLOR BLUE #15090 FEDERAL STANDARD #595B

(F1) 1/4" THICK TRIANGLE COLOR BLUE #15090 FEDERAL STANDARD #595B SUPER IMPOSED OVER 1/4" THICK CIRCLE WITH CONTRASTING COLOR FROM TRIANGLE AND DOOR COLOR

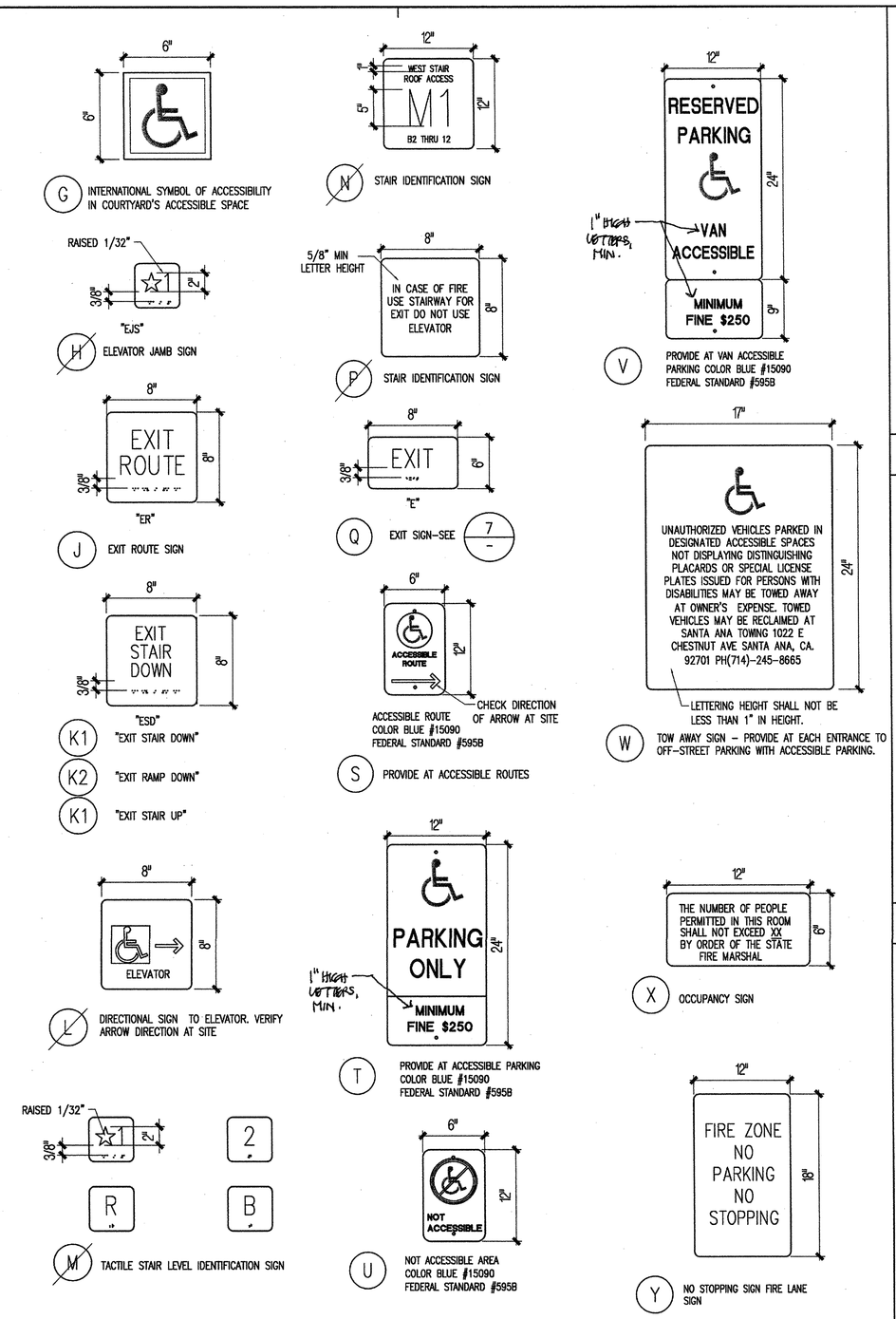

NOTE– (#) INDICATES SIGNAGE NOT USED IN THIS PROJECT

28 ACCESSIBLE SIGNAGE SYMBOLS

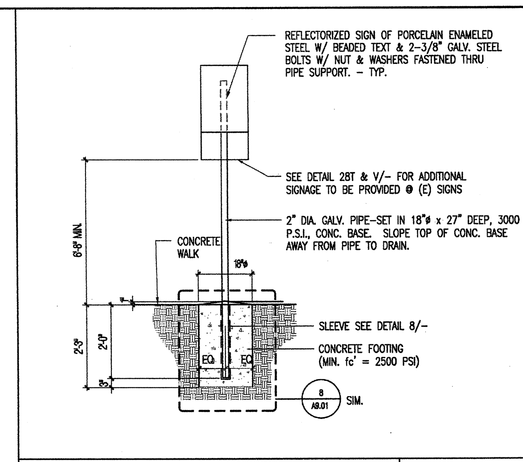

10 ACCESSIBILITY SIGN

SCALE: 3/4"=1'-0"

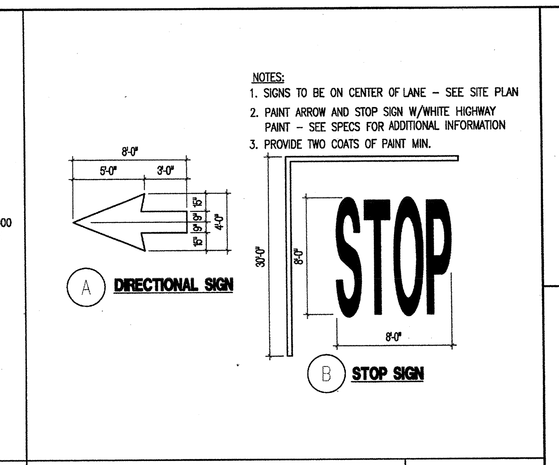

(A) DIRECTIONAL SIGN

(B) STOP SIGN

5 TRAFFIC SURFACE

SCALE: 3/16"=1'-0"

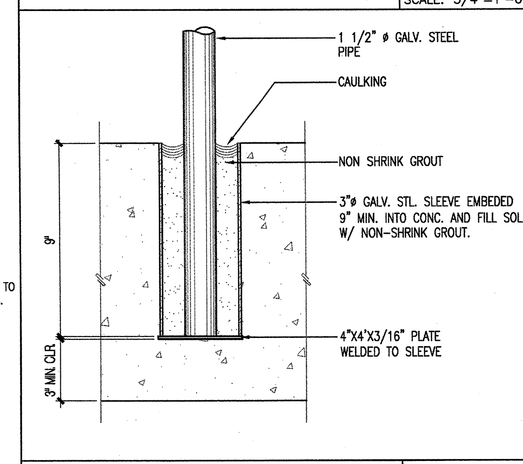

9 POST SLEEVE

SCALE: 3"=1'-0"

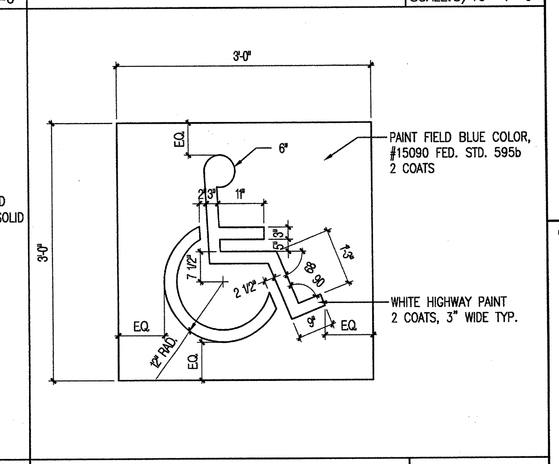

4 ACCESIBILITY SYMBOL

SCALE: 3/4"=1'-0"

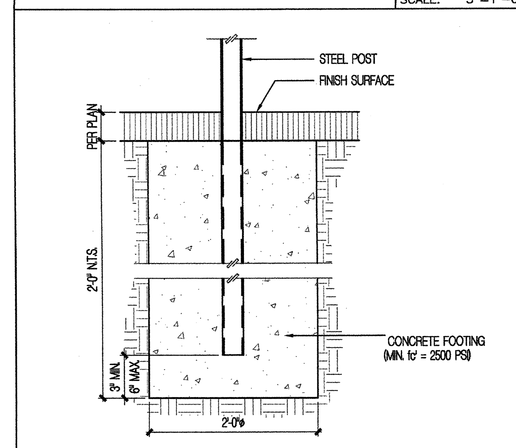

8 POST FOOTING

dt501–1.dwg
SCALE: 1"=1'-0"

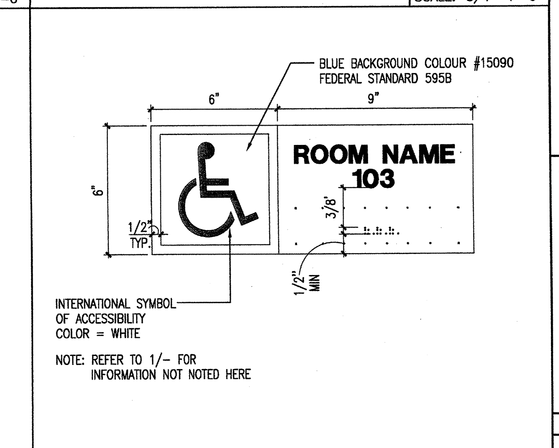

3 ACCESSIBLE ROOM SIGN

SCALE: 3"=1'-0"

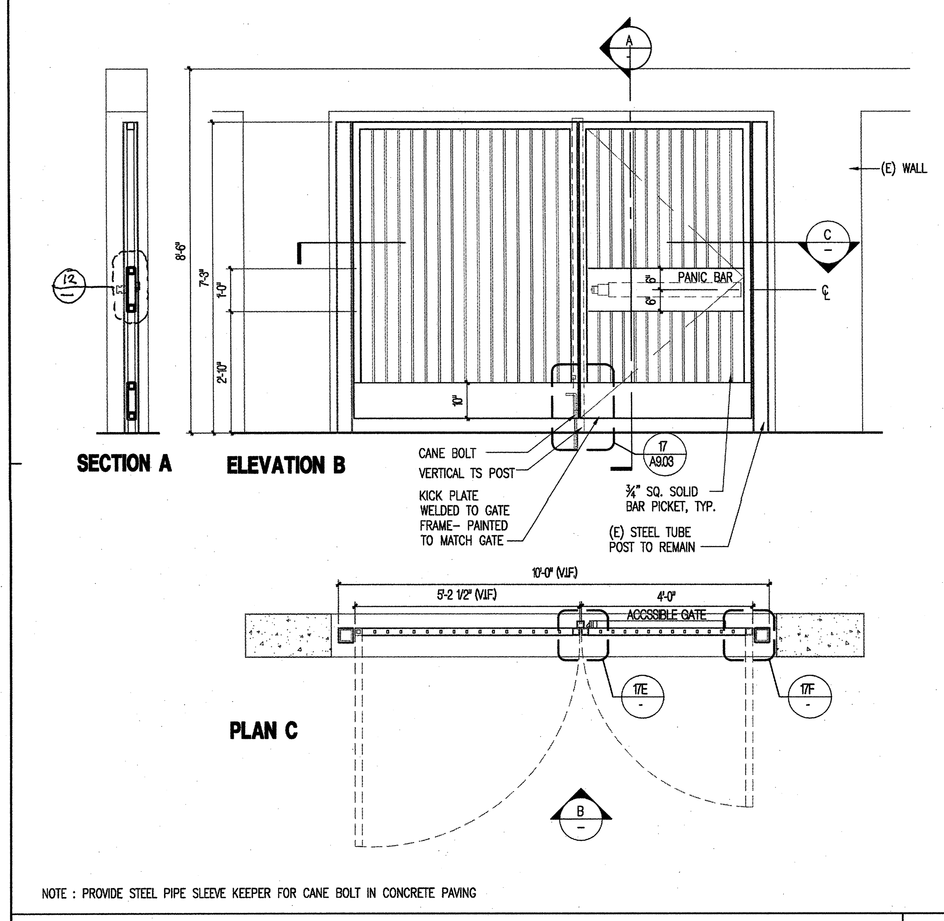

NOTE : PROVIDE STEEL PIPE SLEEVE KEEPER FOR CANE BOLT IN CONCRETE PAVING

26 GATE

SCALE: 1/2"=1'-0"

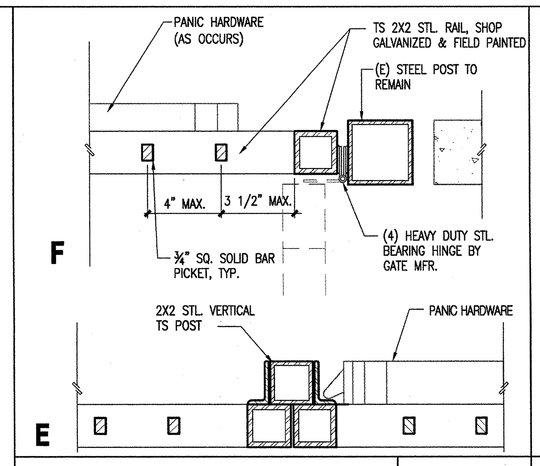

17 MAN GATE JAMB

SCALE: 3"=1'-0"

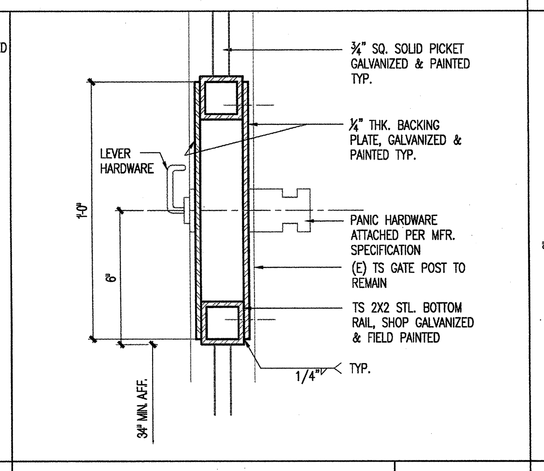

12 PANIC HARDWARE

SCALE: 3"=1'-0"

NOTE:
CALIFORNIA CONTRACTED GRADE 2 BRAILLE SHALL BE USED WHEREVER BRAILLE SYMBOLS ARE SPECIFICALLY REQUIRED DOTS SHALL BE 1/10 INCH (2.54 MM) ON CENTERS IN EACH CELL WITH 2/10 INCH (5.08 MM) SPACE BETWEEN CELLS. DOTS SHALL BE RAISED A MINIMUM OF 1/40 INCH (0.635 MM) ABOVE THE BACKGROUND W/ ROUNDED OR DOMED TOPS PER TITLE 24, SECTION 1117B.5.6

7 ACCESSIBLE EXIT SIGN

SCALE: 3"=1'-0"

2 IDENTIFICATION SYMBOLS

SCALE: 3/8"=1'-0"

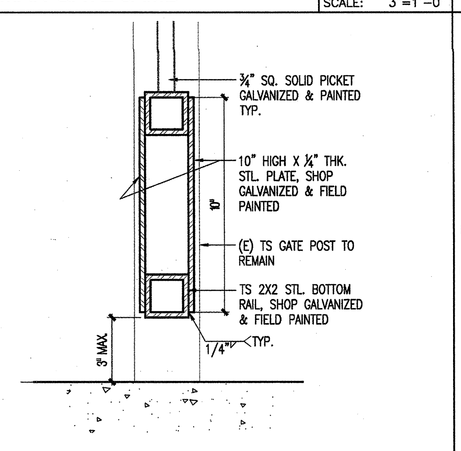

16 KICK PLATE

SCALE: 3"=1'-0"

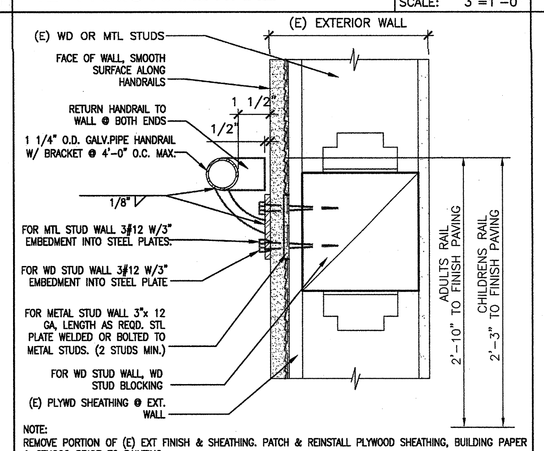

NOTE:
REMOVE PORTION OF (E) EXT FINISH & SHEATHING. PATCH & REINSTALL PLYWOOD SHEATHING, BUILDING PAPER & STUCCO PRIOR TO PAINTING

11 HANDRAIL AT EXT. WALL

SCALE: NTS

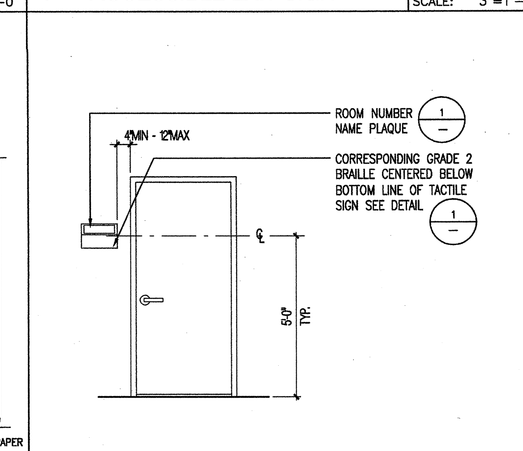

6 ROOM # / NAME PLAQUE

SCALE: 3"=1'-0"

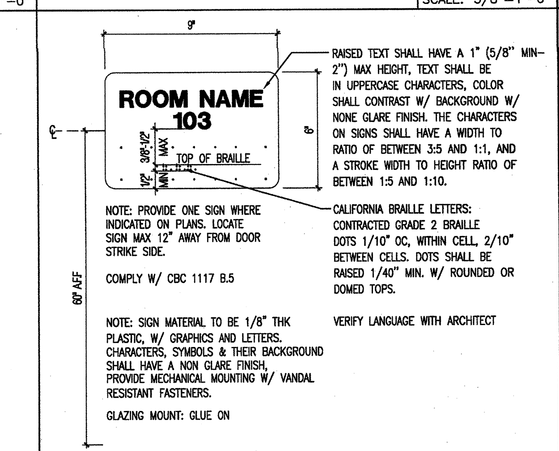

1 ROOM SIGN

SCALE: 3"=1'-0"

K:\Santa Ana USD\10021–010_Muir Fundamental\Deliverables\CAD\A_Arch\10021_010_A–9.01.dwg 11/09/2009

SANTA ANA UNIFIED SCHOOL DISTRICT

gkkworks
2355 Main Street Suite 220
Irvine | CA 92614
949 250 1500
949 955 2708 fax

Architect Seal

LICENSED ARCHITECT GUILLERMO AGUILAR NO. C13165 REN.: MAY. 2011 STATE OF CALIFORNIA

Consultant and Seal

Agency Approval

IDENTIFICATION STAMP
DIV. OF THE STATE ARCHITECT
APPL. 04–110031
AC FLS SS RH
DATE NOV 24 2009

No.	Date	Revision/Issue
	12/08/08	DSA SUBMITTAL
	02/11/09	DSA SUBMITTAL
	5/11/09	DSA BACKCHECK
	12/15/2011	BID SET

Project Name

MUIR FUNDAMENTAL SCHOOL MODERNIZATION
1951 MABURY ST.
SANTA ANA, CA 92705

Checked By	Drawn By
BA	ES

Sheet Title

SIGNAGE DETAILS

Sheet Number

A9.01

Project Number	Scale
10021–010	1/8" = 1'-0"

© 2009 gkkworks, All Rights Reserved
NO PART OF THE CONTENTS OF THIS DOCUMENT MAY BE REPRODUCED OR TRANSMITTED IN ANY FORM OR BY ANY MEANS WITHOUT THE WRITTEN PERMISSION OF GKKWORKS.