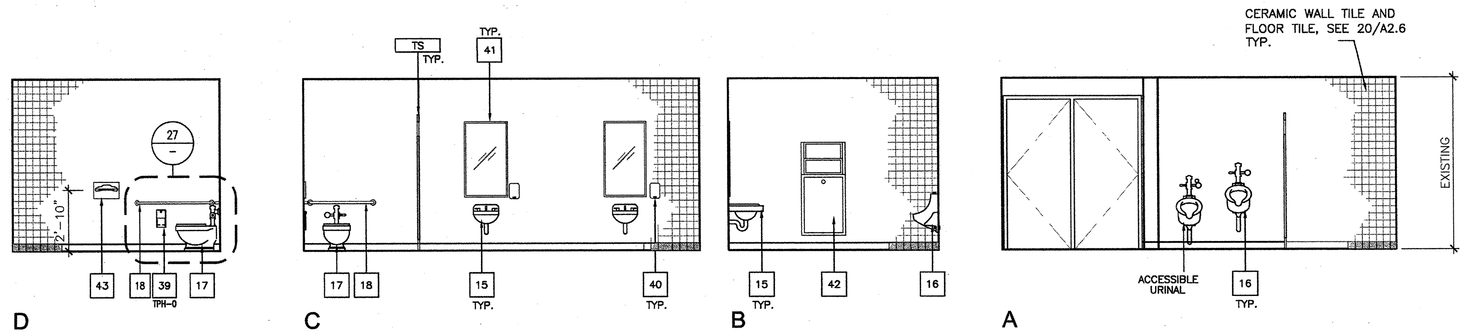

30 BOYS RESTROOM INTERIOR ELEVATIONS

SCALE: 1/4" = 1'-0"

NOTE:
1) SEE DETAL 17/– ADA COMPLIANCES / TOILET ACCESSORIES MOUNTING GUIDE & 21/– ACCESS COMPLIANT DIMENSION SCHEDULE & KEYNOTES.
2) SEE DTL. 26/– FOR GRAB BAR BACKING
3) ELEMENTARY DIMENSIONS ARE USED FOR THIS FACILITY

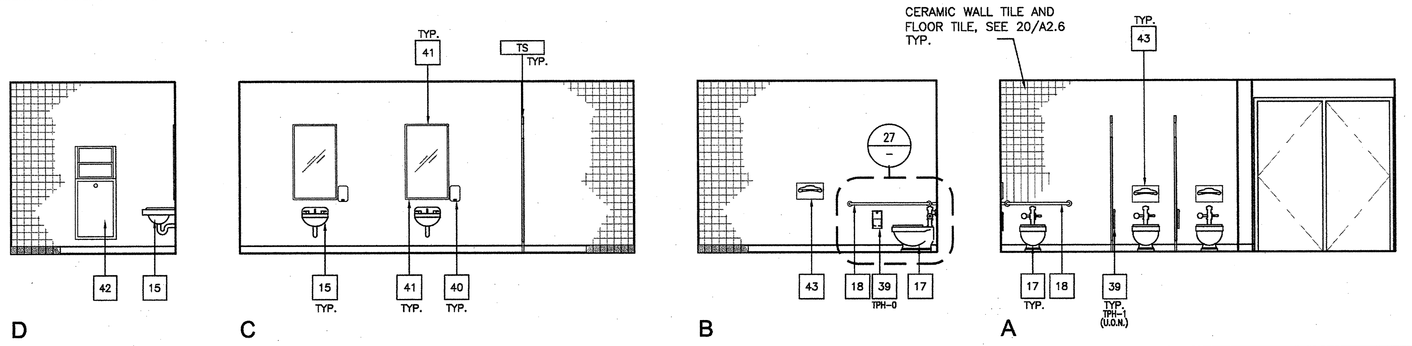

29 GIRLS RESTROOM INTERIOR ELEVATIONS

SCALE: 1/4" = 1'-0"

ACCESS COMPLIANT DIMENSION SCHEDULE & KEYNOTES

A = ADULT DIMENSIONS (AGE 12 & OVER)
E = ELEMENTARY DIMENSIONS
K = KINDERGARTEN & PRE-SCHOOL DIMENSIONS

SYMBOL	KEY NOTE	DIMENSION	A (IN.)	E (IN.)	K (IN.)
TOIL	17	TOILET			
		FROM FINISH SURFACE OF SIDE WALL TO CENTERLINE	18	15	12
		HEIGHT FROM FLOOR TO TOP OF SEAT	18	15	11-12
GB-1	18	GRAB BAR, 36"			
GB-2		GRAB BAR, 42"			
		HEIGHT FROM FLOOR TO CENTER OF BAR	33	27	21
TPH-0	39	RECESSED MULTI-ROLL TOILET TISSUE DISPENSER			
TPH-1		SURFACE MOUNTED MULTI-ROLL TOILET TISSUE DISPENSER			
TPH-2		PARTITION MOUNTED TOILET SEAT COVER & TOILET TISSUE DISPENSER (SERVES 2)			
TPH-3		PARTITION MOUNTED TOILET SEAT COVER & TOILET TISSUE DISPENSER (SERVES 2) (ACCESSIBLE)			
TPH-4		PARTITION MOUNTED TOILET SEAT COVER DISENSER, SANITARY NAPKIN DISPOSAL, & TOILET TISSUE DISPENSER (SERVES 2)			
TPH-5		PARTITION MOUNTED TOILET SEAT COVER DISENSER, SANITARY NAPKIN DISPOSAL, & TOILET TISSUE DISPENSER (SERVES 2) (ACCESSIBLE)			
TPH-6		RECESSED TOILET SEAT COVER DISENSER, SANITARY NAPKIN DISPOSAL, & TOILET TISSUE DISPENSER (ACCESSIBLE)			
		DISTANCE FROM FRONT EDGE OF TOILET SEAT (DISPENSER WITHIN THIS DISTANCE)	12	6	6
		HEIGHT FROM FLOOR TO CENTERLINE	19	19	19
		FACE OF WALL TO FACE OF FIXTURE; 3"MAX WHEN ADJACENT TO LAV 18" FROM WALL	4 MAX.	4 MAX.	4 MAX.
		HEIGHT FROM FLOOR TO OPERABLE PART OR SLOT	40 MAX.	36 MAX.	32 MAX.
SD-1	40	SOAP DISPENSER			
		HEIGHT FROM FLOOR TO OPERABLE PART OR SLOT	40	36	32
MR-1	41	MIRROR, 18"W x 36"H			
MR-2		MIRROR, 48"W x 36"H			
		MAX HEIGHT FROM FLOOR TO BOTTOM EDGE OF REFLECTIVE SURFACE	40	34	32
PTD	42	PAPER TOWEL DISPENSER, SURFACE			
		MAX. HEIGHT FROM FLOOR TO OPERABLE PART OR SLOT	40	36	32
TSCD	43	TOILET SEAT COVER DISPENSER			
		MAX. HEIGHT FROM FLOOR TO OPERABLE PART OR SLOT	40	36	32
UR	16	WATERLESS URINAL OR STANDARD TYPE			
		HEIGHT FROM FLOOR TO RIM	17 MAX.	15 MAX.	13 MAX.
		HEIGHT FROM FLOOR TO FLUSH VALVE	44	36	32
LAV	15	LAVATORY			
		MAX. HEIGHT OF LAV ABOVE FIN. FLOOR	34	29	24
		DEPTH	6½	4½	4½
		KNEE CLEARANCE (BOWL)	27 MIN.	24 MIN.	19 MIN.
DF-1	44	ACCESSIBLE HI-LOW (2) BUBBLER			
DF-2		MAX. HEIGHT OF D.F. ABOVE FIN. FLOOR	36	30	30
		MIN. D.F. KNEE CLEARANCE	27	24	22
HD-1	45	ELECTRIC HAND DRYER, RECESSED			
		MAX. HEIGHT FROM FLOOR TO OPERABLE PART OR SLOT	40	36	32
SNWR		SANITARY NAPKIN DISPOSAL			

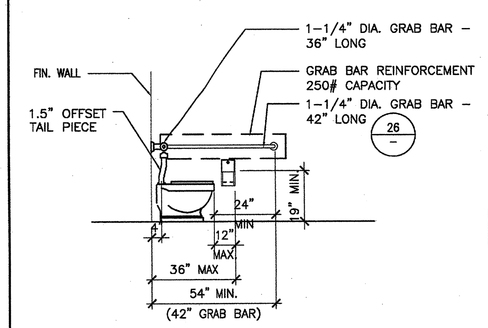

27 TYP. ACCESSIBLE STALL DIMENSIONS

SCALE: X

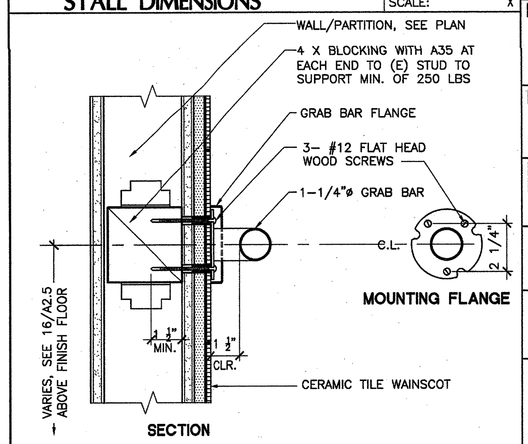

26 TOILET GRAB BAR

D10-GBAR-101.dwg
SCALE: 3"=1'-0"

21 ACCESS COMPLIANT DIMENSION SCHED.

RENOVATION KEYNOTES:

1. TILE ON FLOOR AND WALLS. SEE 20/A2.6
2. FOR REFLECTED CEILING PLAN, SEE 28/A2.6
3. ACCESSIBLE DRINKING FOUNTAIN SEE 19/A2.6
4. ACCESSIBLE THRESHOLDS @ EXTERIOR DOORS
5. ACCESSIBLE RESTROOM SIGNAGE, SEE 28/A9.01
6. NOT USED
7. ACCESSIBLE PLUMBING FIXTURE (SEE PLUMBING DWGS)
8. INSULATION AND JACKET ON WASTE PIPING & HOT WATER SUPPLY.
9. TOILET PARTITION

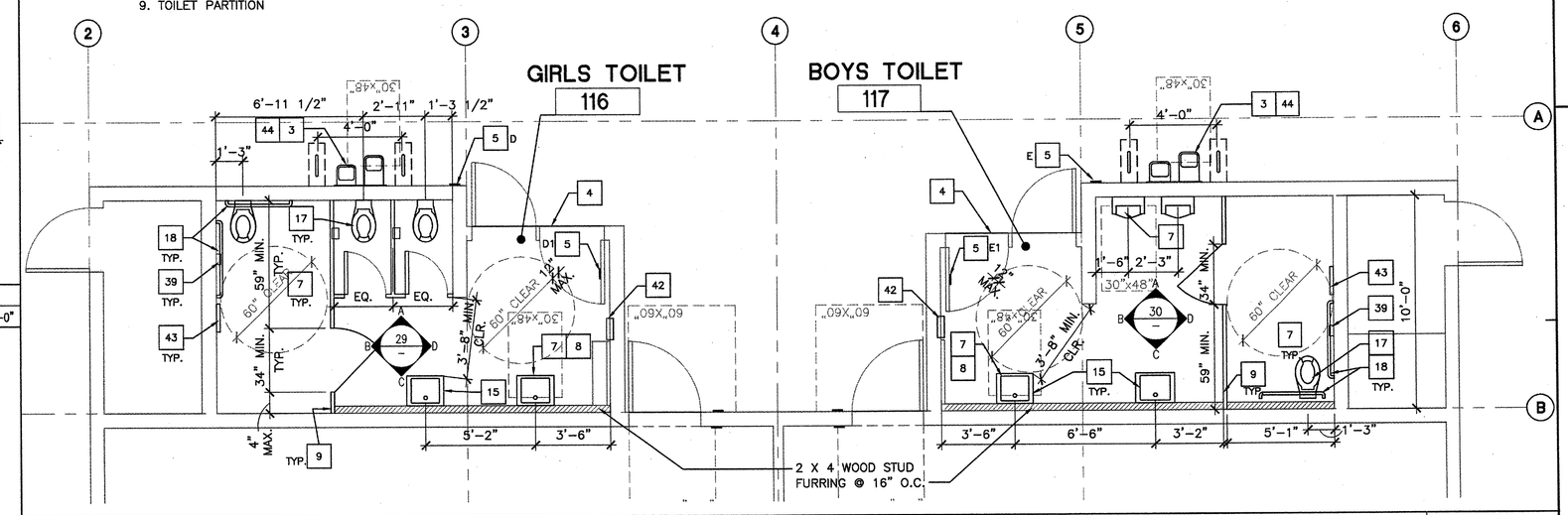

15 (E) BUILDING 6 BOYS AND GIRLS RESTROOM RENOVATION PLAN

10021M_06_XFP01.DWG
SCALE: 1/4" = 1'-0"

DEMOLITION KEYNOTES:

1. DEMO ENTIRE RESTROOM ACCESSORIES INCLUDING PLUMBING FIXTURES, TOILET PARTITIONS, AND FLOOR AND WALL FINISHES. PREPARE FOR FIXTURES, ACCESSORIES AND FINISHES.
2. EXISTING GYPSUM BOARD CEILING TO REMAIN
3. NOT USED
4. NOT USED
5. REPLACE (E) D.FS WITH HI-LO D.FS, SEE PLUMBING DWGS.

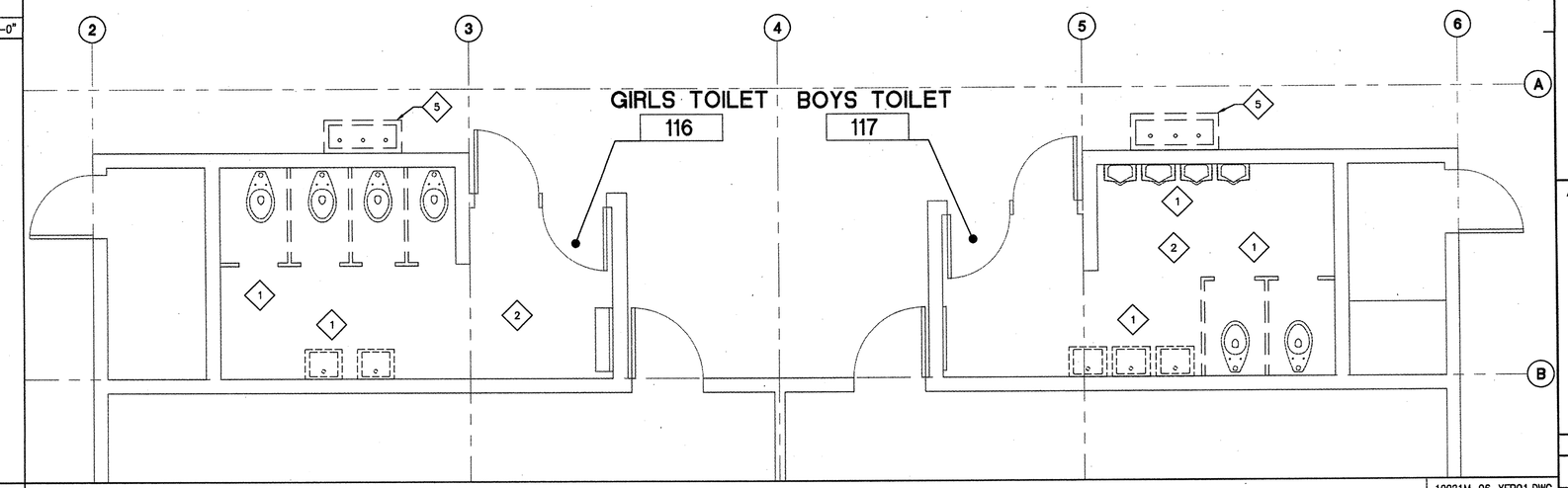

14 (E) BUILDING 6 BOYS AND GIRLS RESTROOM DEMO PLAN

10021M_06_XFP01.DWG
SCALE: 1/4" = 1'-0"

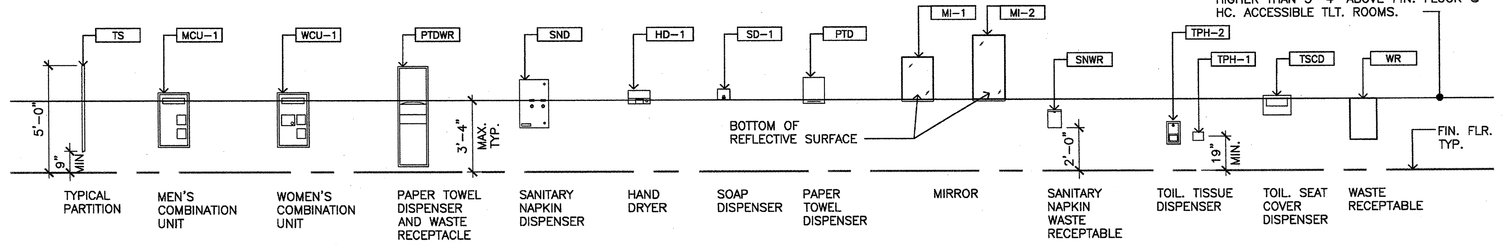

ACCESSIBLE TOILET ACCESSORIES

1) FOR TOILET ACCESSORY BACKING SEE DETAIL 1/A2.6
2) SEE # 21/– FOR MOUNTING HEIGHT INFO.

RESTROOM ACCESSORY SCHEDULE

GB-1	GRAB BAR–HORIZONTAL 36", 1 1/4" DIA
GB-2	GRAB BAR–HORIZONTAL 42", 1 1/4" DIA
HD-1	SEMI RECESSED HAND DRYER
MI-1	MIRROR WITH STAINLESS STEEL CHANNEL FRAME & SHELF
PTD	SURFACE MOUNTED PAPER TOWEL DISPENSER, MAX. 4" PROJ.
SD-1	SURFACE MOUNTED SOAP DISPENSER
SNWR	SANITARY NAPKIN SURFACE MOUNTED WASTE RECEPTACLE
TSCD	SURFACE MOUNTED SEAT COVER DISPENSER
TPH-0	RECESSED TOILET TISSUE DISPENSER
TPH-1	SURFACE MOUNTED TOILET TISSUE DISPENSER
TS	TOILET PARTITION STALL
WR	SURFACE MOUNTED WASTE RECEPTACLE

SEE SPECIFICATION SECTION 10800 FOR ADDITIONAL INFORMATION

17 ADA COMPLIANCES DETAILS / TOILET ACCESSORIES MOUNTING GUIDE

SCALE: X / 1/4" = 1'-0"

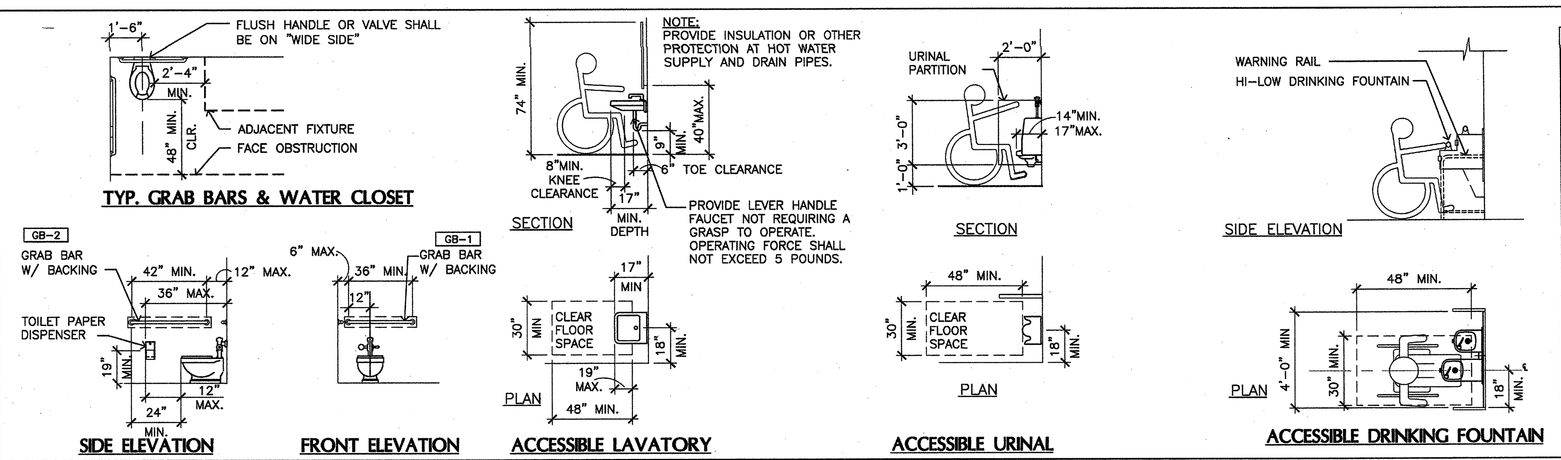

NOTES:

1. GRAB BARS TO BE 1-1/4" DIAMETER WITH 1-1/2" CLEARANCE TO FINISH WALL SURFACE.
2. GRAB BARS SHALL HAVE BACKING AND BE DESIGNED TO SUPPORT A 250 POUND POINT LOAD.
3. FLUSH CONTROLS SHALL BE ACCESSIBLE FROM THE WIDE SIDE OF THE TOILET.
4. FLOOR TO SLOPE 2% MAX. IN ANY DIRECTION.
5. FLOOR SURFACE TO BE NON–SLIP.

NOTES:

1. BUBBLER ORIFICE TO BE WITHIN 6" OF THE FRONT OF THE DRINKING FOUNTAIN WITH THE WATER STREAM PARALLEL TO THE FRONT EDGE 4" MIN. HIGH
2. CONTROL LEVER TO BE LOCATED WITHIN 6" OF THE FRONT AND ACTIVATED BY A FORCE NOT EXCEEDING 5 POUNDS

SEE SCHEDULE ON # 21/– FOR MOUNTING HEIGHT INFO.

16 TYPICAL MOUNTING HEIGHTS

SCALE: 1/4" = 1'-0"

SANTA ANA UNIFIED SCHOOL DISTRICT

gkkworks
2355 Main Street Suite 220
Irvine | CA 92614
949 250 1500
949 955 2708 fax

Architect Seal

LICENSED ARCHITECT GUILLERMO AGUILAR NO. C13165 REN.: MAY. 2012 STATE OF CALIFORNIA

Consultant and Seal

Agency Approval

IDENTIFICATION STAMP
DIV. OF THE STATE ARCHITECT
APPL. 04–110031
AC FLS SS RH
DATE NOV 2 4 2009

No.	Date	Revision/Issue
	12/08/08	DSA SUBMITTAL
	02/11/09	DSA SUBMITTAL
	5/11/09	DSA BACKCHECK
	12/15/2011	BID SET

Project Name

MUIR FUNDAMENTAL SCHOOL MODERNIZATION
1951 MABURY ST.
SANTA ANA, CA 92705

Checked By: BA
Drawn By: AF

Sheet Title: ENLARGED TOILET ROOM PLAN, DETAILS & ELEVATIONS (TYPICAL)

Sheet Number: A2.5

Project Number: 10021–010
Scale: AS NOTED

© 2009 gkkworks, All Rights Reserved
NO PART OF THE CONTENTS OF THIS DOCUMENT MAY BE REPRODUCED OR TRANSMITTED IN ANY FORM OR BY ANY MEANS WITHOUT THE WRITTEN PERMISSION OF GKKWORKS.

K:\Santa Ana USD\10021-010_Muir Fundamental\Deliverables\CAD\A_Arch\10021_010_A-2.5.dwg 11/09/2009