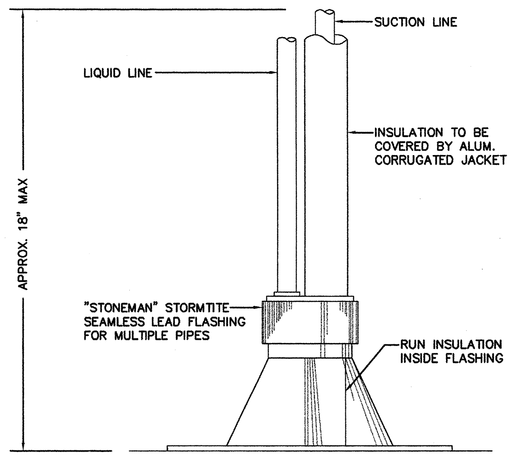

REFRIGERANT PIPING THRU ROOF — NTS — 10

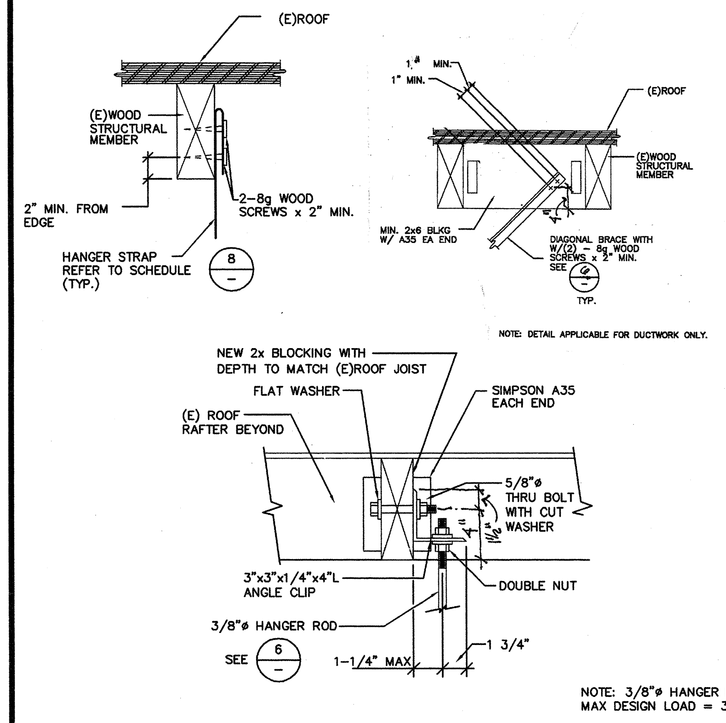

CONNECTION TO WOOD STRUCTURE — NTS — 7

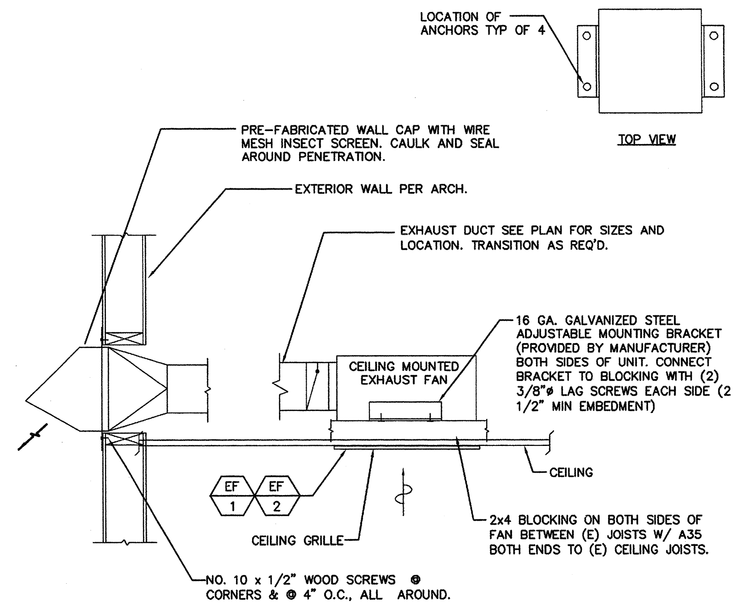

NOTES:

1. ALL EXHAUST OUTLETS SHALL BE 10'-0" FROM ANY AIR INTAKES.
2. SEE MANUFACTURER'S INSTALLATION MANUAL FOR ADDITIONAL INFORMATION.
3. PLASTER OVER CAPFLANGE AND SEAL BETWEEN THE PLASTER 'J' MOULD AND FLANGE, ALL AROUND.

CEILING MOUNTED EXHAUST FAN — NTS NTS — 4

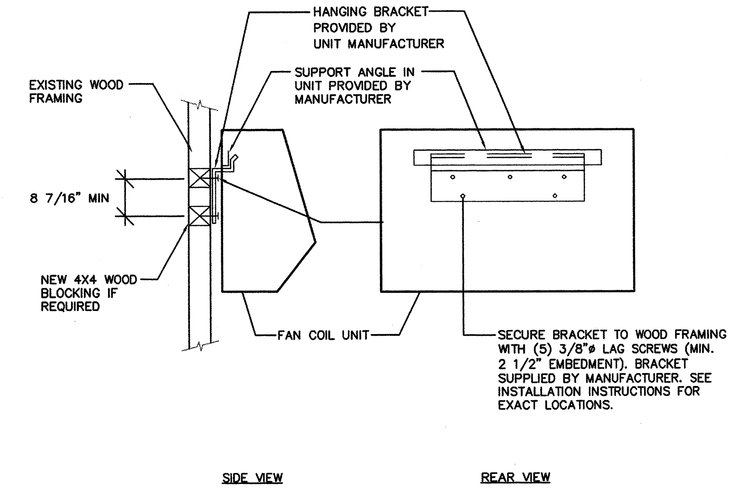

WALL MOUNTED FAN COIL — NTS — 1

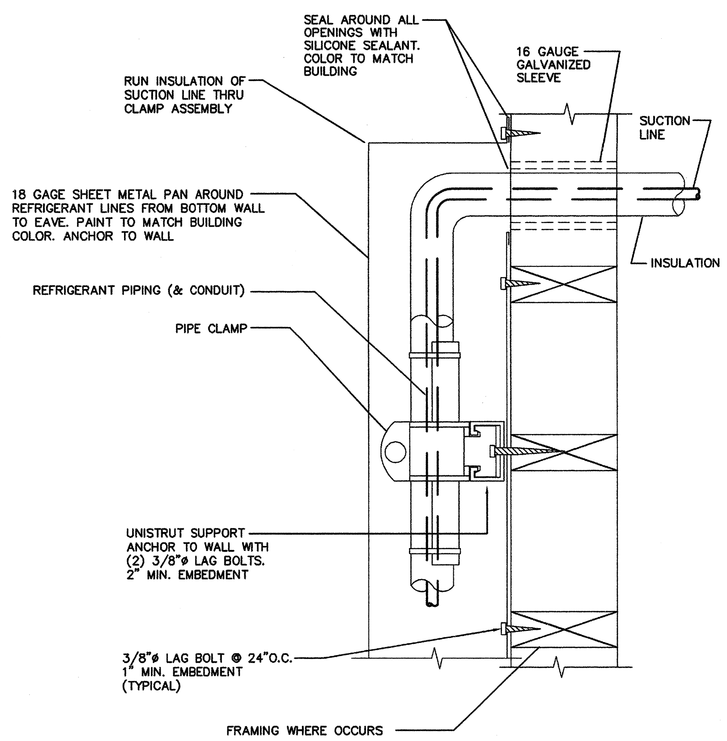

PIPE RACK ON WALL — NTS — 11

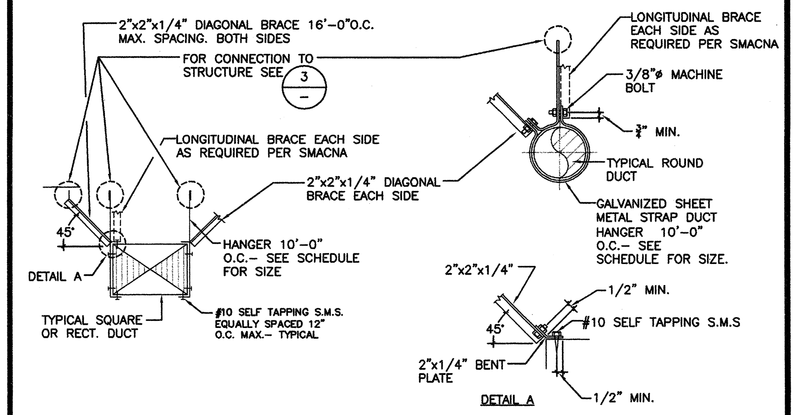

RECTANGULAR DUCT			ROUND DUCT		
MAX. OF DUCT PERIMETER/IN.	STRAP	MAX. LOAD EACH HANGER/LBS.	DIAMETER /INCHES	STRAP	MAX. LOAD EACH HANGER/LBS.
P/2 =72	1"X 20 GA.	20	UP TO 20"	1"X 20 GA.	20
P/2 =96	1"X 18 GA.	30	21" TO 36"	1"X 18 GA.	30

NOTE:

1. NO BRACING REQUIRED IF DUCT IS SUSPENDED 12 INCHES OR LESS IN LENGTH.
2. FOR TRANSVERSE AND LONGITUDINAL BRACING FOLLOW "SMACNA" GUIDELINES FOR SEISMIC HAZARD LEVEL "A".
3. MAXIMUM LENGTH OF DIAGONAL BRACE:
   2"x2"x1/4" ANGLE IRON: 6' - 6"
   3"x3"x1/4" ANGLE IRON: 9' - 6"

DUCT SUPPORT DETAIL — NTS — 8

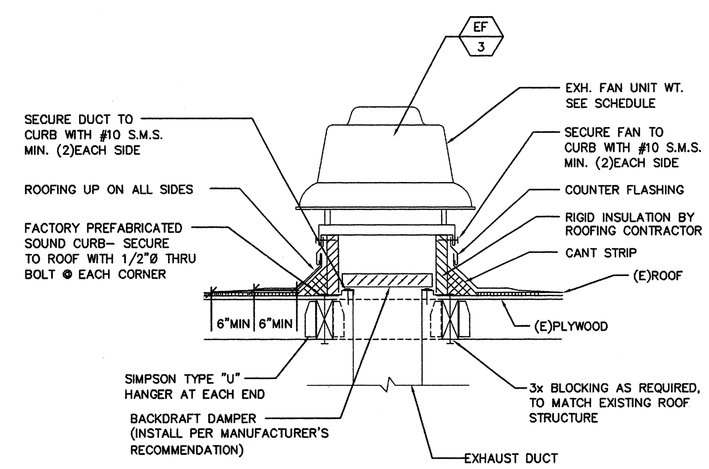

ROOF MOUNTED EXHAUST FAN DETAIL — NTS — 5

UNIT DIMENSIONS		
UNIT(S)	"A" IN INCHES	"B" IN INCHES
CU-2 & CU-3	14 3/16	19 11/16
CU-5 & CU-6	12 3/16	19 11/16

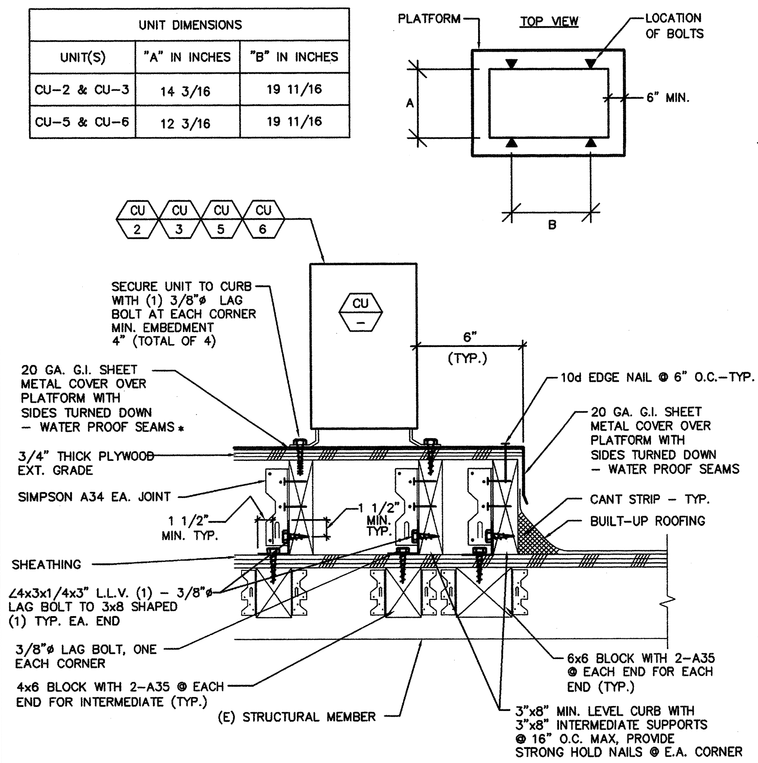

CONDENSING UNIT ON ROOF — NTS — 2

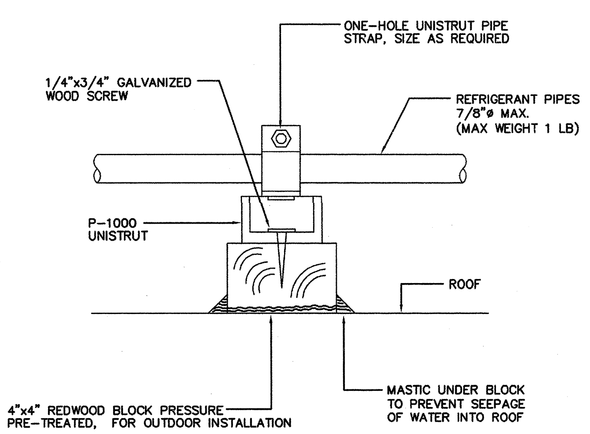

NOTE: TYPICAL OF TWO PIPES PER SUPPORT.

REFRIGERANT PIPING ON ROOF — NTS — 9

PIPE SCHEDULE	
PIPE SIZE	WEIGHT LBS/LF
5/8"	.285
1/2"	.198
3/8"	.134
1/4"	.0804

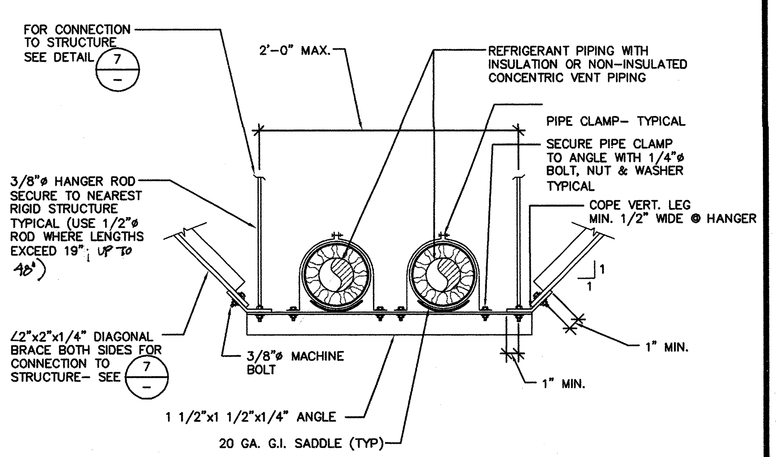

PIPING SUPPORT — NTS — 6

UNIT DIMENSIONS		
UNIT(S)	"A" IN INCHES	"B" IN INCHES
CU-1	12 3/16	19 11/16
CU-4	12	19 11/16

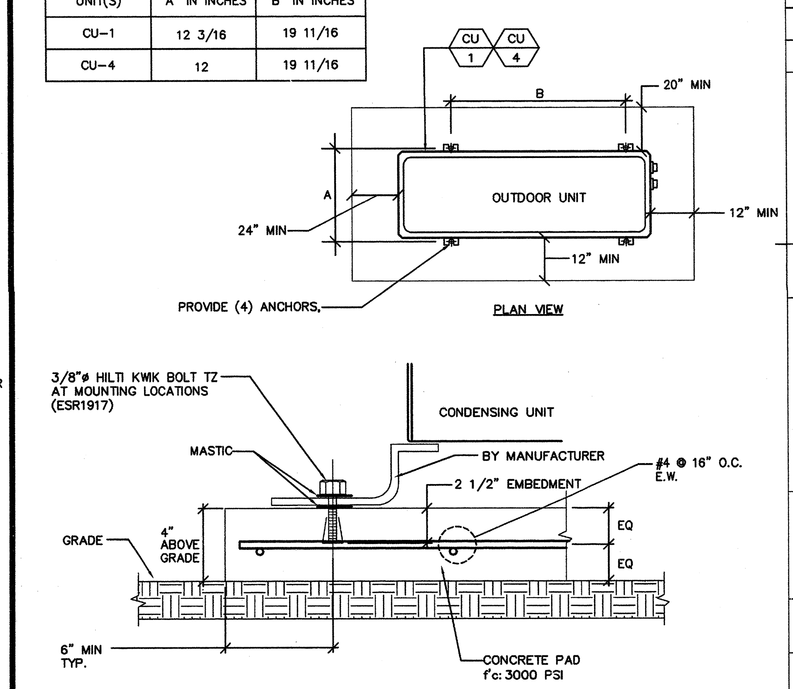

CONDENSING UNIT MOUNTING AT GRADE — NTS — 3

- — NTS — 12

N:\20.CAD\TTG_Projects\2008\2008-125-00\Wpe\M3-0.dwg 11/13/2009

SANTA ANA UNIFIED SCHOOL DISTRICT

gkkworks
2355 Main Street Suite 220
Irvine | CA 92614
949 250 1500
949 955 2708 fax

Architect Seal
LICENSED ARCHITECT GUILLERMO AGUILAR NO. C13165 EXP.: MAY. 2011 STATE OF CALIFORNIA

Consultant and Seal
TMAD TAYLOR & GAINES
• STRUCTURAL • MECHANICAL • ELECTRICAL • CIVIL
800 North Ferrari Lane, Suite 100
Ontario, California 91764
Phone: 909.477.6915 Fax: 909.477.6916
Project No. 2008.125.00

REGISTERED PROFESSIONAL ENGINEER CHRIS E. RAUTKE No. M24519 Exp. 6/30/10 CIVIL STATE OF CALIFORNIA

Agency Approval

IDENTIFICATION STAMP
DIV. OF THE STATE ARCHITECT
APPL. 04-110031
AC FLS SS RH
DATE NOV 24 2009

No.	Date	Revision/Issue
	12/08/08	DSA SUBMITTAL
	02/11/09	DSA SUBMITTAL
	5/11/09	DSA BACKCHECK
	12/15/2011	BID SET

Project Name
MUIR FUNDAMENTAL SCHOOL MODERNIZATION
1951 MABURY ST.
SANTA ANA, CA 92707

Checked By: VR
Drawn By: PR

Sheet Title
DETAILS

Sheet Number
M3.0

Project Number: 10021-010
Scale: NONE

©2009 gkkworks, All Rights Reserved
NO PART OF THE CONTENTS OF THIS DOCUMENT MAY BE REPRODUCED OR TRANSMITTED IN ANY FORM OR BY ANY MEANS WITHOUT THE WRITTEN PERMISSION OF GKKWORKS.