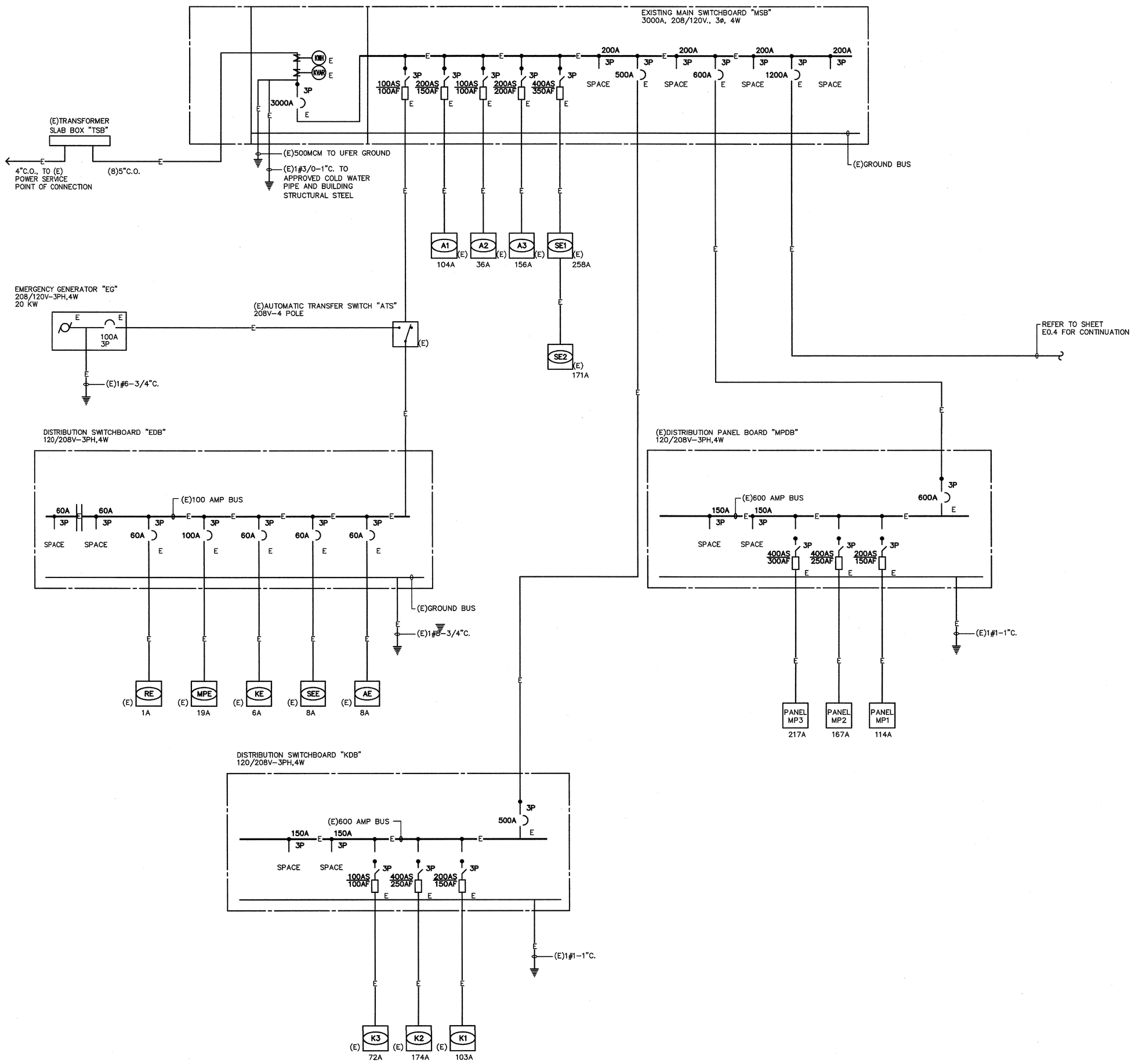

N:\20.CAD\TTG_Projects\2008\2008-125-00\Mpe\E0-3.dwg 10/02/2009

SANTA ANA UNIFIED SCHOOL DISTRICT

gkkworks
2355 Main Street Suite 220
Irvine | CA 92614
949 250 1500
949 955 2708 fax

Architect Seal

LICENSED ARCHITECT
GUILLERMO AGUILAR
NO. C13165
REN.: MAY. 2011
STATE OF CALIFORNIA

Consultant and Seal

T M A D TAYLOR &GAINES
• STRUCTURAL
• MECHANICAL
• ELECTRICAL
• CIVIL
800 North Ferrari Lane, Suite 100
Ontario, California 91764
Phone: 909.477.6915 Fax: 909.477.6916
Project No. 2008.125.00

REGISTERED PROFESSIONAL ENGINEER
HEMON C. TOMOTIO
Lic. E16934
Exp. 6-30-2011
ELECTRICAL
STATE OF CALIFORNIA

Agency Approval

IDENTIFICATION STAMP
DIV. OF THE STATE ARCHITECT
APPL. 04-110031
AC ✓ FLS ✓ SS ✓ H
DATE NOV 2 4 2009

No.	Date	Revision/Issue
	12/08/08	DSA SUBMITTAL
	02/11/09	DSA SUBMITTAL
	5/11/09	DSA BACKCHECK
	12/15/2011	BID SET

Project Name

MUIR
FUNDAMENTAL
SCHOOL MODERNIZATION
1951 MABURY ST.
SANTA ANA, CA 92707

Checked By	Drawn By
RA	JHC

Sheet Title

SINGLE LINE DIAGRAM

Sheet Number

E0.3

Project Number	Scale
10021-010-00	NONE

© 2009 gkkworks, All Rights Reserved
NO PART OF THE CONTENTS OF THIS DOCUMENT MAY BE REPRODUCED OR TRANSMITTED IN ANY FORM OR BY ANY MEANS WITHOUT THE WRITTEN PERMISSION OF GKKWORKS.